FORGED STEEL

HORIZONTAL LIFT CHECK VALVE
(Class-2500)

INTRODUCTION
Leader forged steel check valve is to provide with single disc. With the force of medium, the disc will automatically open or close. When the media stops the flow, the disc will be closed under its own force. No manual intervention is involved in the whole process Check valve is mainly to prevent the media reverse flow and ensure one-way flow of media channels only. It prevents accidents while a sudden loss of power in the pipeline medium such as the power equipment like pump damages, and the medium reserve flow against power source.

PRINCIPAL FEATURES
- Design Std.: ASME B16.34.
- Pressure Temperature Rating as per ASME B16.34.
- Sturdy design for high pressure & temperature service.
- Welded body-cover joints offers an additional level of safety against fugitive emission.
- Piston / Disc is guided in the Cover assuring accurate return to seating to achieve leak tightness.
- Spring-loaded disc on check valves suitable for non horizontal applications too available on request.
- Socket welded ends as per ASME B16.11.
- Butt weld ends as per ASME B16.25 available on request.
- Low Temperature Carbon Steel & Austenitic SS forging for body and cover design qualified as per BS 6364 for Cryogenic service available on request.
- Valves can be offered to NACE MR-0175 and other special NACE requirements.
- Valves are available with IBR certification.

END CONNECTION
Socket Weld / Butt Welded ends.

WORKING PRESSURE
Maximum working pressure 425 Bar.
See Pressure / Temperature chart at page No.38.

TEMPERATURE LIMITS
Maximum working temperature 425ºC.
See Pressure / Temperature chart at page No.38.

- **Item Code:** FCS034
- **Pressure Rating:** CL-2500
- **Testing Standard:** API-598, BSEN 12266 Part-1
- **Size Range:** 15mm to 25mm
- **Product Standard:** ASME B16.34

SUITABLE FOR

Water	Oil	Air	Gases	Steam
✓	✓	✓(#)	✓	✓

(#) Recommended with soft seating for tight sealing

TEST PRESSURE (Hydrostatic)

Rating	CL-2500
Body (Hyd.)	639 Bar
Seat (Hyd.)	468 Bar

TRIM MATERIAL COMBINATION (ON REQUEST)

Trim No.	Seat Ring Face	Wedge Seat Face	Stem	Backseat Bush	Lantern Ring
2	F304	F304	F304/AISI304	F304/AISI304	F304/AISI304
5	STELLITE(#6)	STELLITE(#6)	F6a/AISI410	F6a/AISI410	F6a/AISI410
8	STELLITE(#6)	F6a/13%Cr.	F6a/AISI410	F6a/AISI410	F6a/AISI410
9	MONEL	MONEL	MONEL	MONEL	MONEL
10	F316	F316	F316/AISI316	F316/AISI316	F316/AISI316
12	316+Stellite(#6)	316	F316/AISI316	F316/AISI316	F316/AISI316
13	ALLOY 20	ALLOY 20	ALLOY 20	ALLOY 20	ALLOY 20

Note : The above data is subject to change without notice due to our continuing product improvement program.

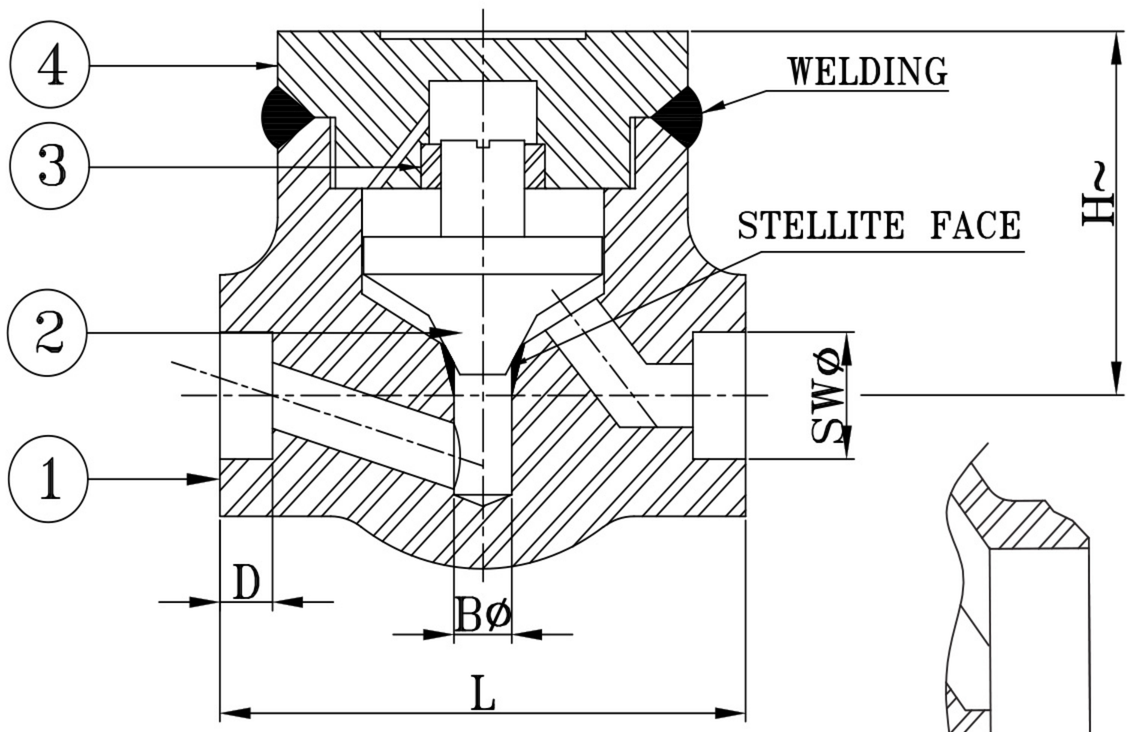

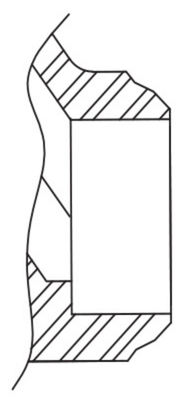

BUTT WELD ENDS

DIMENSIONAL DATA CLASS-2500

SIZE (mm)		15	20	25
L		130	130	130
H~		75	75	75
BØ		11.0	14.0	19.0
SWØ	AS PER ASME B16.11	22.2	27.6	34.3
		21.8	27.2	33.9
D		11	14	14

MATERIAL SPECIFICATION

P.No.	NAME OF PART	CARBON STEEL		ALLOY STEEL				STAINLESS STEEL			
1	BODY	A105	A350 LF2	A182 F5	A182 F11	A182 F22	A182 F9	A182 F304	A182 F316	A182 F304L	A182 F316L
2	DISC	ASTM A217 Gr.CA15/ ASTM 276 TYPE 410 +STELLITE	SS 304 +STELLITE	CA15/ SS 410 +STELLITE	CA15/ SS 410 +STELLITE	CA15/ SS 410 +STELLITE	CA15/ SS 410 +STELLITE	SS 304 +STELLITE	SS 316 +STELLITE	SS 304L +STELLITE	SS 316L +STELLITE
3	BUSH	ASTM A276 TYPE 410	SS 304	SS 410	SS 410	SS 410	SS 410	SS 304	SS 316	SS 304L	SS 316L
4	COVER	A105	A350 LF2	A182 F5	A182 F11	A182 F22	A182 F9	A182 F304	A182 F316	A182 F304L	A182 F316L