INVESTMENT CAST STEEL

BALL VALVE
(Class-800)

INTRODUCTION
Leader Ball Valves are available in three-piece construction. It offers full flow with minimum turbulence and can balance or throttle fluids. Ball move from closed to full open in a quarter of a turn of the shaft and therefore referred to as quarter turn ball valve.

PRINCIPAL FEATURES
- Design Std.: BSEN ISO 17292.
- Pressure Temperature Rating as per ISO 5208 / API 598.
- Sturdy design for high pressure & temperature service.
- Three-piece constructions designed for easy online service.
- Floating Ball, line pressure forces the floating ball against the downstream seat to effect bubble-tight sealing.
- Mirror-finished Solid Stainless Steel Ball ensures bubble-tight sealing and lower operating torques.
- Premium quality PTFE seats to ensure bubble-tight sealing and lower operating torques.
- Inbuilt antistatic mechanisms to provide electrical continuity
- Blowout proof stem design.
- Fire safe design as per API 607, feature secondary metal seats act in the event of a fire, after the soft-seat totally deform, the ball moves and touch the metal seat to form a leak- tight seal.
- Screwed Female Taper ends as per ASME B1.20.1 (NPT) / BS 21, Screwed Female Parallel ends as per ISO 228 / BS 21 available on request.
- Socket-weld / Butt Welded are available on request with 100mm Nipple on both the ends.
- Lever operated.
- Valves can be offered with electrical and Pneumatic actuators on request.

Item Code:	WCB012,	WCB013
Bore Type:	Reduced Bore	Full Bore
Pressure Rating:	CL-800,	CL-800
Testing Standard:	API-598, BSEN 12266 Part-1	
Size Range:	15mm to 50mm	
Product Standard:	BSEN ISO 17292	

SUITABLE FOR

Water	Oil	Air	Gases
✓	✓	✓	✓

END CONNECTION
Screwed ends / Socket Weld.

WORKING PRESSURE
Maximum working pressure 69 Bar @ 38ºC.
See Pressure / Temperature Chart at page No.38.

TEMPERATURE LIMITS
Maximum working temperature 175ºC.
See Pressure / Temperature Chart at page No.38.

TEST PRESSURE (Hydrostatic)

Rating	CL-800
Body (Hyd.)	178 Bar
Seat (Hyd.)	76 Bar
Seat (Air)	6.9 Bar

PRESSURE / TEMPERATURE DIAGRAM

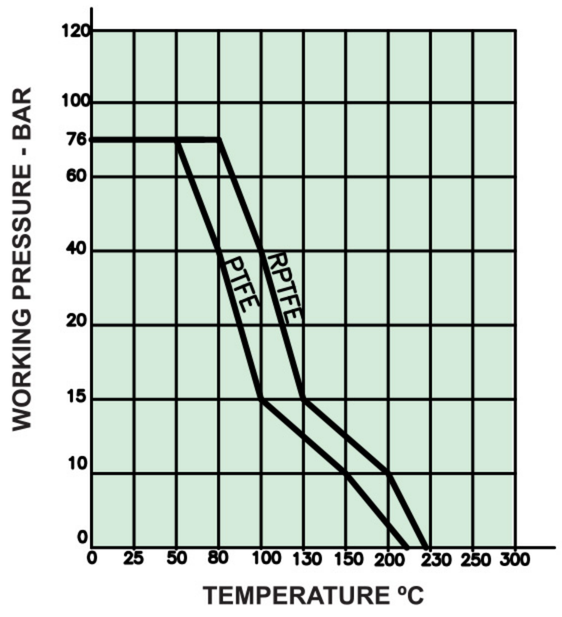

Note : The above data is subject to change without notice due to our continuing product improvement program.

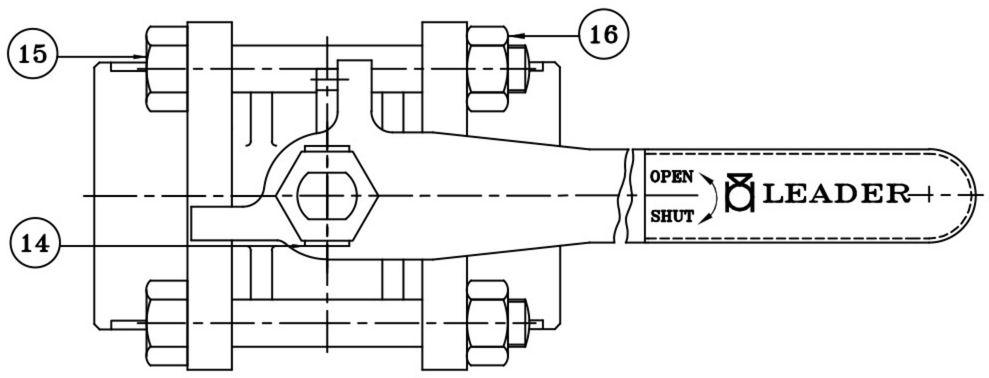

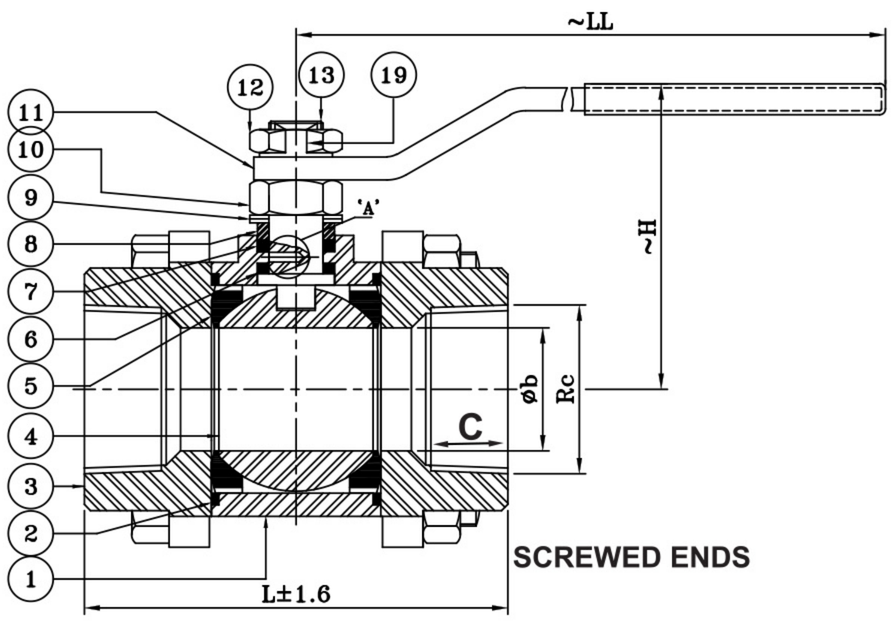

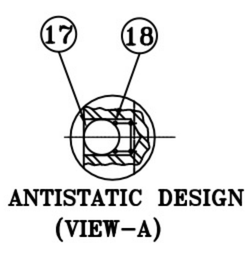

ANTISTATIC DESIGN
(VIEW–A)

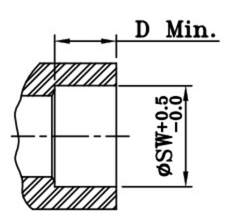

SOCKET WELDED ENDS.

DIMENSIONAL DATA CLASS-800 (REDUCED BORE)

SIZE (mm)	15	20	25	32	40	50
L	60	70	85	95	110	120
Øb	9.5	12.5	19	25	32	40
~H	80	82	103	112	118	122
C	14.5	15	18	18	20	18
Rc	1/2”	3/4”	1”	1-1/4”	1-1/2”	2”
~LL	165	165	180	180	230	272
ØSW	21.7	27	33.8	42.5	48.6	61.6
D	10	13	13	13	13	16

DIMENSIONAL DATA CLASS-800 (FULL BORE)

SIZE (mm)	15	20	25	32	40
L	70	85	95	110	120
Øb	12.5	19	25	32	40
~H	82	103	112	118	122
C	15	18	19	20	20
Rc	1/2”	3/4”	1”	1-1/4”	1-1/2”
~LL	165	180	180	230	272
ØSW	21.7	27	33.8	42.5	48.6
D	10	13	13	13	13

MATERIAL SPECIFICATION

P.No.	NAME OF PART	MATERIAL	SPECIFICATION
1	BODY	CAST STEEL	ASTM A216 Gr. WCB
2	BODY SEAL	PTFE / GRAFOIL	
3	PIPE CONNECTOR	CAST STEEL	ASTM A216 Gr. WCB
4	BALL	STAINLESS STEEL	ASTM A351 Gr. CF8
5	SEAT	PTFE	
6	STEM SEAL	PTFE / GRAFOIL	
7	GLAND SEAL	PTFE / GRAFOIL	
8	GLAND	STAINLESS STEEL	ASTM A276 TYPE 410
9	BELLEVILLE WASHER	SPRING STEEL	BS 970 EN 42J
10	STEM NUT	STAINLESS STEEL	ASTM A276 TYPE 410
11	LEVER (ZINC PLATED)	CARBON STEEL PLATE WITH PLASTIC SLEEVE	
12	LEVER NUT	STAINLESS STEEL	ASTM A276 TYPE 410
13	STEM	STAINLESS STEEL	ASTM A276 TYPE 410
14	LOCKING WASHER	CARBON STEEL	IS 2062
15	BOLTS	H.T. STEEL	IS 1367 CL-10.9
16	NUTS	H.T. STEEL	IS 1367 CL-10.9
17	ANTISTATIC BALL	STAINLESS STEEL	SS TYPE 316
18	SPRING	STAINLESS STEEL	SS TYPE 316

Note : The above data is subject to change without notice due to our continuing product improvement program.