GUN METAL/BRONZE IS778 CM/L-0485757 HORIZONTOL LIFT CHECK VALVE

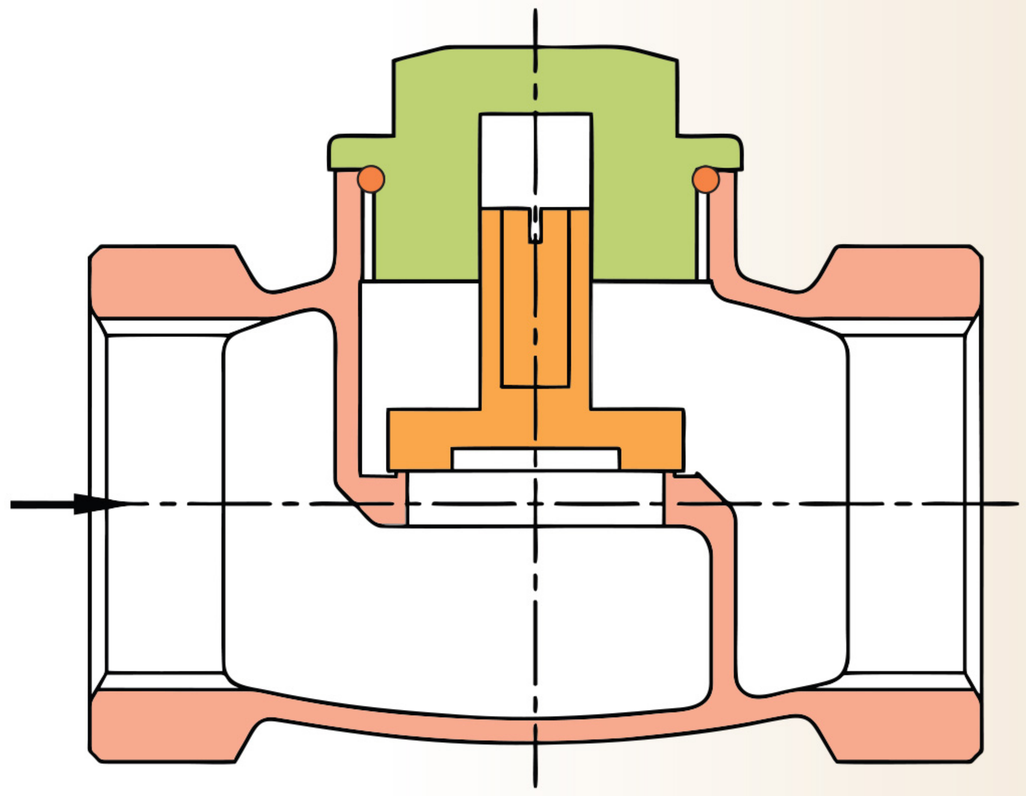

BODY	1
COVER	2
DISC	3
'O' RING	4

- **Item Code:** IS 021 & IS 023
- **Pressure Rating:** CL-1 & CL-2
- **Testing Standard:** IS 6157
- **Size Range:** 8mm to 100mm
- **Product Standard:** IS 778

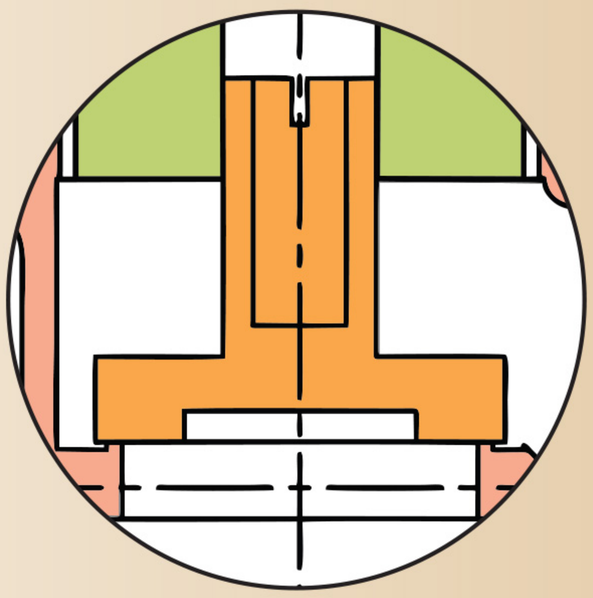

PRESSURE/TEMPERATURE DIAGRAM

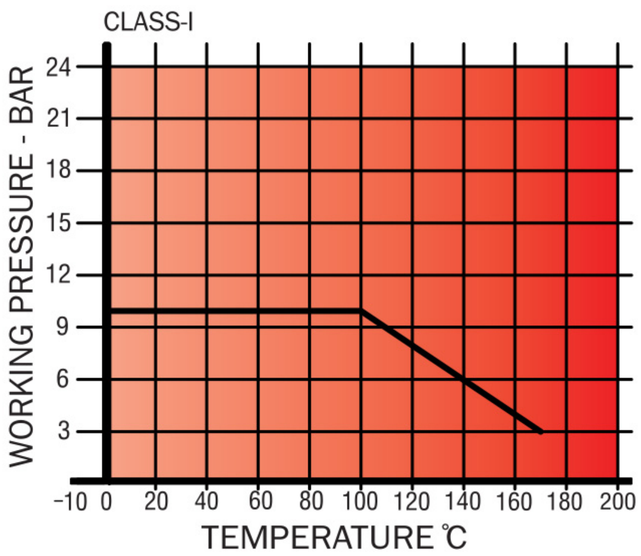

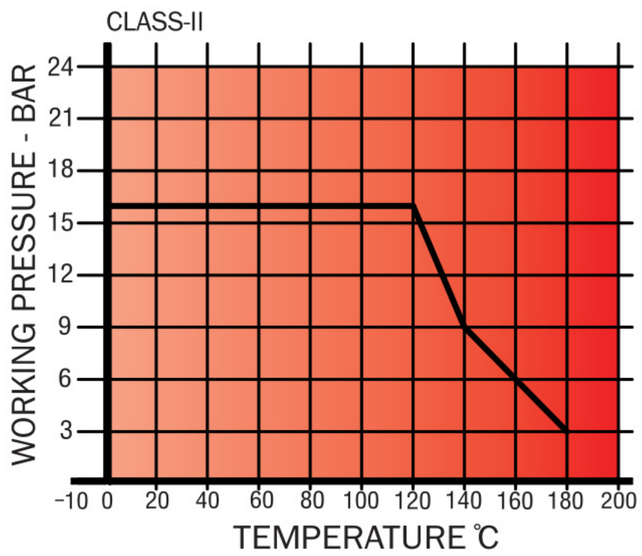

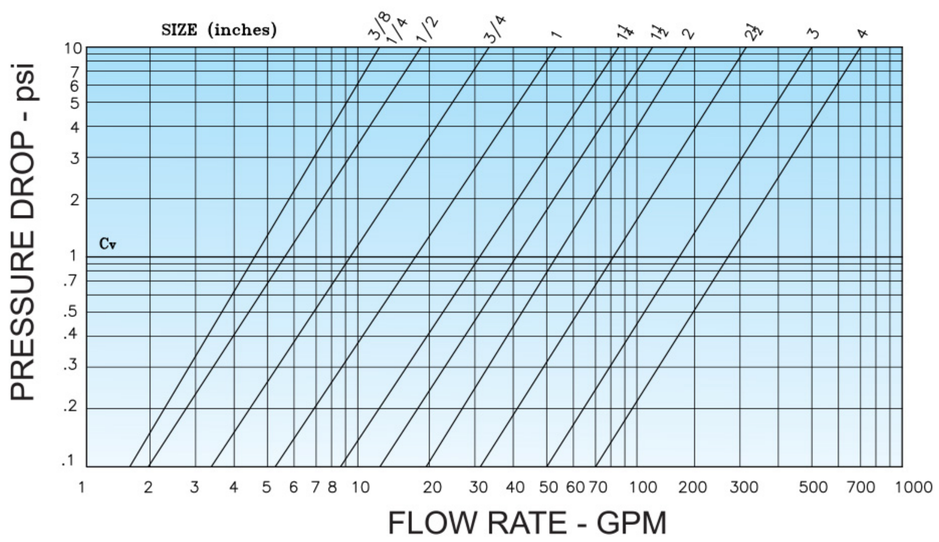

Note : The above data is subject to change without notice due to our continuing product improvement program.

PRINCIPAL FEATURES

- Design Std.: IS:778.
- Screwed in cover, integral seat.
- Screwed female parallel threads to IS:554.
- Disc is guided in body as well as in cover.
- Permits flow in one direction and close.
- Automatically if the flow reverses.
- Profiled contoured shape body for minimum pressure head loss.

END CONNECTION

- Screwed Female threads IS:554 (Parallel).

UTILISATION & SERVICE

- "LEADER" Gun Metal Horizontal Lift Check valves are suitable for above-ground & underground installations.
- Suitable for installation in Horizontal pipe line.
- Best suited for potable water, treated fresh water, neutral liquids.

WORKING PRESSURE

- Maximum Working Pressure: (Class-I) 10 Bar, (Class-II) 16 Bar.
- See Pressure / Temperature Diagram.

TEMPERATURE LIMITS

- Maximum working temperature: 45°C.
- See Pressure / Temperature Diagram.

PRESSURE RATING: CL-1 & CL-2

TEST PRESSURE (Hydrostatic)		TEST PRESSURE (Hydrostatic)	
CLASS - 1		CLASS - 2	
BODY	SEAT	BODY	SEAT
1.5 Mpa (217.5 psig)	1.0 Mpa (145 psig)	2.4 Mpa (348 psig)	1.6 Mpa (232 psig)

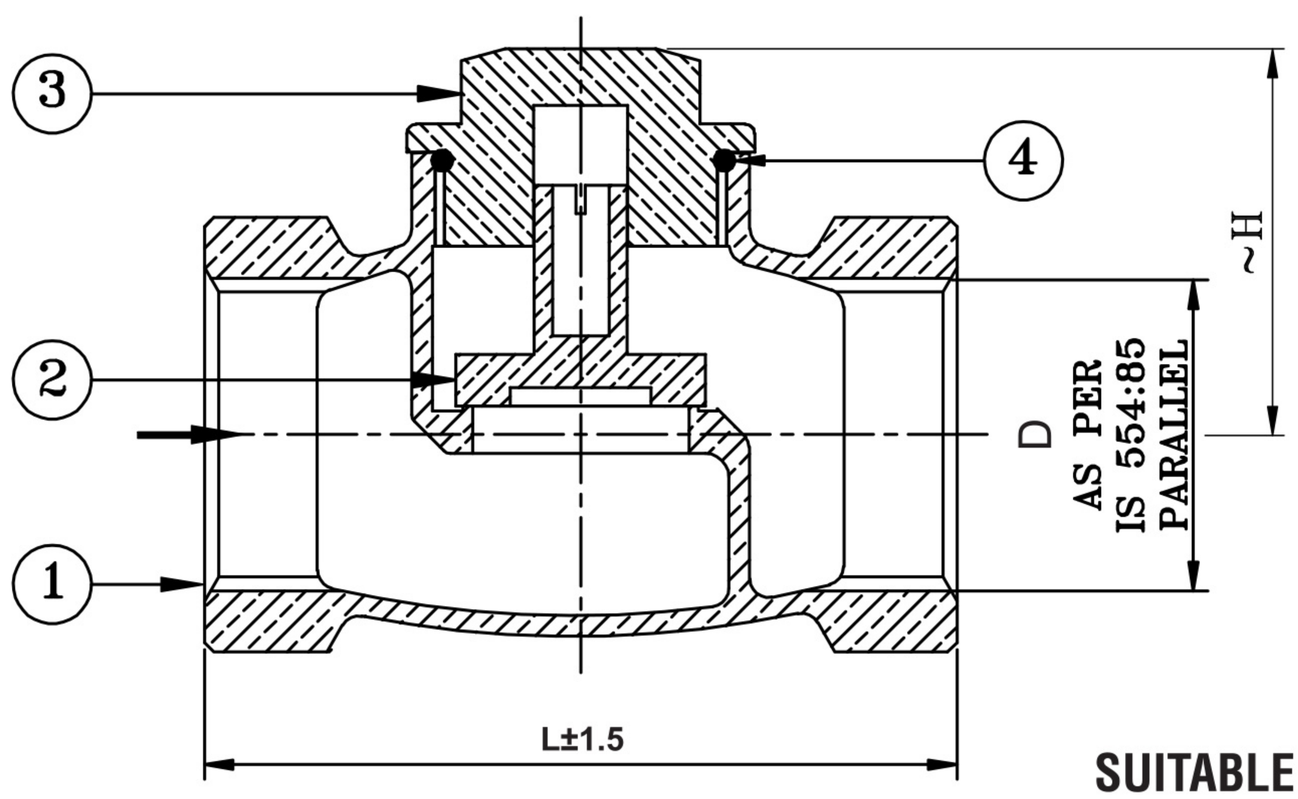

SUITABLE FOR

Water	Oil	Air	Gases
✓			

DIMENSION TABLE

SIZE (mm)	8	10	15	20	25	32	40	50	65	80	100
L	47	50	60	70	80	95	110	125	160	180	216
~H	33	33	35	35	41	57	60	65	88	94	118
D	1/4"	3/8"	½"	3/4"	1"	1-1/4"	1-1/2"	2"	2-1/2"	3"	4"
Item Code (CL-1)	IS021	IS021	IS021	IS021	IS021	IS021	IS021	IS021	IS021	IS021	IS021
Item Code (CL-2)	IS023	IS023	IS023	IS023	IS023	IS023	IS023	IS023	IS023	IS023	IS023

MATERIAL SPECIFICATION

P.No.	NAME OF PART	MATERIAL	SPECIFICATION
1	BODY	LEADED TIN BRONZE	IS 318 Gr. LTB2
2	COVER	LEADED TIN BRONZE / FORGED BRASS	IS 318 Gr. LTB2 / IS 6912 Gr. FLB
3	DISC	LEADED TIN BRONZE / HIGH TENSILE BRASS	IS 318 Gr. LTB2 / IS 6912 Gr. FHTB1
4	'O' RING	NITRILE RUBBER	----------

Note : The above data is subject to change without notice due to our continuing product improvement program.