CAST IRON

GATE VALVE

INTRODUCTION

Leader Cast Iron Gate Valves (Non-Rising Spindle) are best suited for services that require infrequent valve operation, and where the wedge is kept either fully opened or fully closed. It offers the ultimate in dependable service wherever minimum pressure drop is important.

PRINCIPAL FEATURES

- Bolted Bonnet, inside screw, Non Rising Stem.
- Solid Wedge, Metal to Metal seating.
- Flanged ends as per ASME B16.1 CL-125.
- Compact & rigid structure.
- Provided full flow with minimal pressure drop.
- Small opening and closing torque.
- Using Non-Asbestos packing, reliable sealing, light and flexible operation.
- Robust construction of hand wheel in open spoke design.
- Provision for re-packing under pressure in the installed condition.
- Easy visual control of open / closed position marked on the hand wheel.
- Operation mode manual, gear, electric, pneumatic.
- Available with open-shut indicator & locking arrangement on request.
- Widely used in water distribution, power plants and pipeline for access or cut off the medium pipeline opening and closing devices.

END CONNECTION

Flanged as per ASME / ANSI B16.1 CL-125 F.F.
Flange drilling as per other standards also available upon request.

UTILISATION & SERVICE

"LEADER" Cast Iron Gate valves are suitable for above-ground installations.
Best suited for potable water, treated fresh water, neutral liquids & some gases.

WORKING PRESSURE

Maximum Working pressure:13.8 Bar.
See Pressure / Temperature Diagram.

TEMPERATURE LIMITS

Maximum Working temperature: 45°C.
See Pressure / Temperature Diagram.

Item Code:	CI0004
Pressure Rating:	CL - 125
Testing Standard:	Mfg. Standard
Size Range:	40mm to 300mm
Product Standard:	Mfg. Standard

SUITABLE FOR

Water	Oil	Air	Gases
✓		✓	✓

TEST PRESSURE (Hydrostatic)

Rating	CL-125
Body (Hyd.)	20.7 Bar
Seat (Hyd.)	15.18 Bar

PRESSURE/TEMPERATURE DIAGRAM

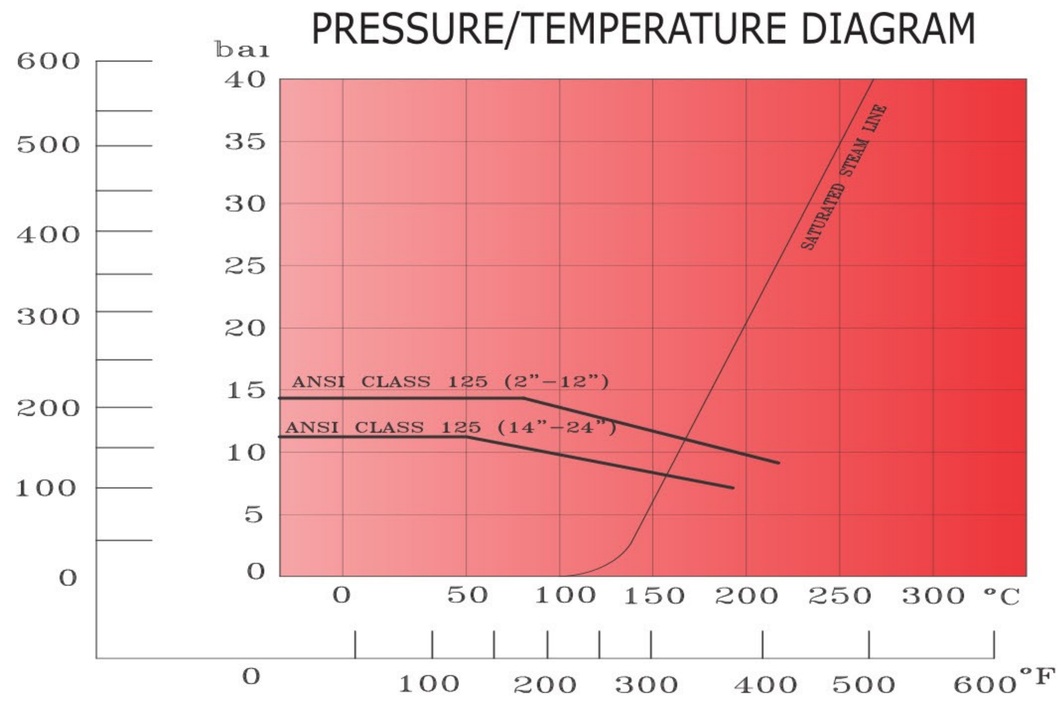

Note : The above data is subject to change without notice due to our continuing product improvement program.

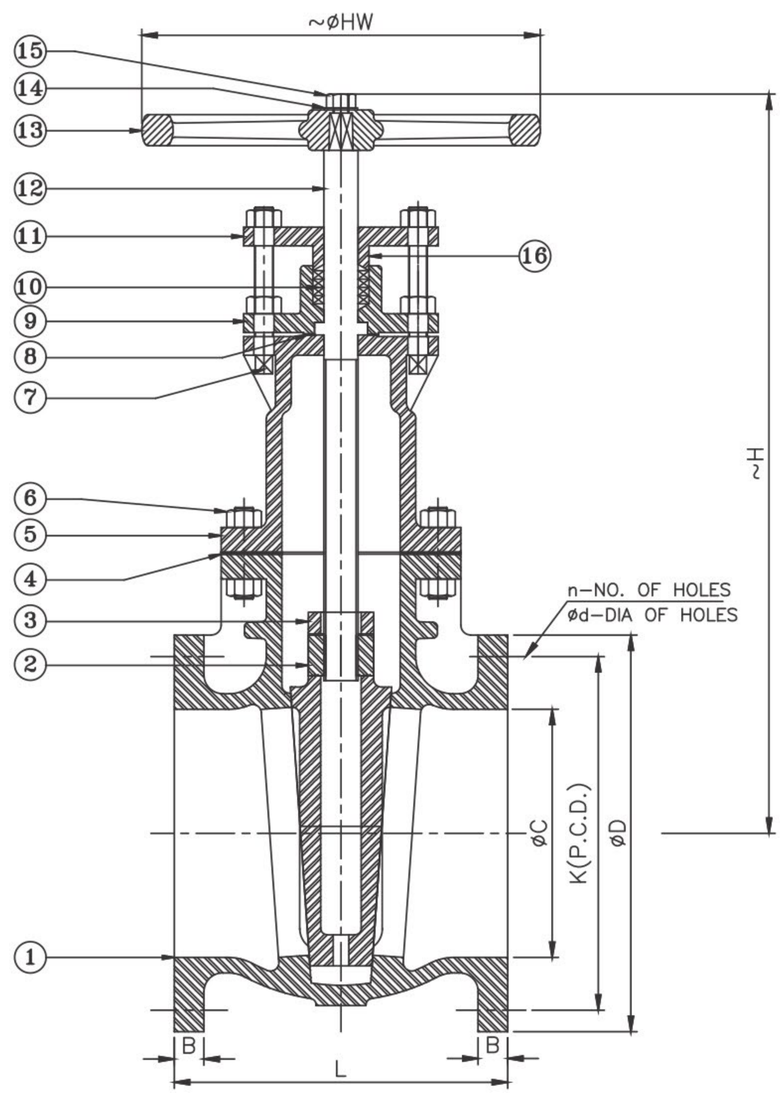

MATERIAL SPECIFICATION

P.No.	NAME OF PART	MATERIAL	SPECIFICATION
1	BODY	CAST IRON	BSEN 1561 Gr. ENGJL 200
2	STEM NUT	CAST IRON	BSEN 1561 Gr. ENGJL 200
3	WEDGE	CAST IRON	BSEN 1561 Gr. ENGJL 200
4	GASKET	C.N.A.F	B.S. 1832
5	BONNET	CAST IRON	BSEN 1561 Gr. ENGJL 200
6	BOLTS & NUTS	CARBON STEEL	BS 4190
7	T-HEAD BOLTS & NUTS	CARBON STEEL	BS 4190
8	GASKET	C.N.A.F	B.S. 1832
9	STUFFING BOX	CAST IRON	BSEN 1561 Gr. ENGJL 200
10	PACKING	TO SUIT SERVICE CONDITIONS	
11	GLAND FLANGE	CAST IRON	IS 2062 Gr. A
12	STEM	CARBON STEEL	IS 2062 Gr. B
13	HAND WHEEL	CAST IRON	BSEN 1561 Gr. ENGJL 200
14	WASHER	CARBON STEEL	ANY GRADE
15	BOLT FOR HAND WHEEL	CARBON STEEL	BS 4190

DIMENSIONAL DATA

SIZE (mm)	40	50	65	80	100	125	150	200	250	300
L	140 ±1.6	143 ±1.6	159 ±1.6	172 ±1.6	194 ±1.6	203 ±1.6	213 ±1.6	248 ±1.6	340 ±1.6	369 ±3.2
~H	215	238	270	320	370	420	480	635	760	865
~ØHW	127	140	140	178	203	229	229	254	406	406
ØC	38.1	50.8	63.5	76.2	101.6	127	152.4	203	254	305
ØD	127	152	178	191	229	254	279	343	406	483
B	14.3	15.9	17.5	19	23.8	23.8	25.4	28.6	30.2	31.8
K	98.5	121	140	152	191	216	241	299	362	432
n	4	4	4	4	8	8	8	8	12	12
Ød	15.9	19	19	19	19	22.2	22.2	22.2	25.4	25.4

Note : The above data is subject to change without notice due to our continuing product improvement program.