CAST IRON

GATE VALVE

INTRODUCTION

Leader Cast Iron Gate Valves (Rising Spindle) are best suited for services that require infrequent valve operation, and where the wedge is kept either fully opened or fully closed. It offers the ultimate in dependable service wherever minimum pressure drop is important. Outside screw and yoke (OS&Y) feature offer quick visual indicator of open / closed position is required. The OS&Y configuration protects the stem.

PRINCIPAL FEATURES

- Design Std.: BSEN 1171.
- Bolted Bonnet, outside screw & Yoke type, Rising Stem.
- Solid Wedge, Metal to Metal seating.
- Gun Metal Body & Wedge rings, Stainless Steel Stem.
- Flanged as per ASME B16.1 CL-125 F.F.
- Compact & rigid structure.
- Provided full flow with minimal pressure drop.
- Small opening and closing torque.
- The outside screw & Yoke configuration protects the stem & offer quick visual indicator of open / closed position.
- Using Non-Asbestos packing, reliable sealing, light and flexible operation.
- Robust construction of hand wheel in open spoke design.
- Provision for re-packing under pressure in the installed condition.
- Easy visual control of open / closed position marked on the hand wheel.
- Operation mode manual, gear, electric, pneumatic.
- Available with open-shut indicator & locking arrangement on request.
- Widely applied for low-pressure and ambient-temperature utility services such as water supply, power plants, sewage treatment, gas supply, district heating piping, irrigation projects, air conditioning systems, as well as food processing industry, chemical and petrochemical industry, pharmaceutical and powder industry for access or cut off the medium pipeline opening and closing devices.

END CONNECTION

Flanged as per ASME B16.1 CL-125 F.F.
Flange drilling as per other standards also available upon request.

UTILISATION & SERVICE

Best suited for potable water, treated fresh water, neutral liquids & some gases.

WORKING PRESSURE

Maximum Working Pressure: 13.8 Bar.
See Pressure / Temperature Diagram.

TEMPERATURE LIMITS

Maximum Working temperature: 220°C.
See Pressure / Temperature Diagram.

Item Code:	CI0011
Pressure Rating:	CL-125
Testing Standard:	BSEN 1171
Size Range:	40mm to 600mm
Product Standard:	BSEN 1171

SUITABLE FOR

Water	Oil	Air	Gases
✓	✓	✓	✓

TEST PRESSURE (Hydrostatic)

Rating	CL-125
Body (Hyd.)	20.7 Bar
Seat (Hyd.)	15.18 Bar

PRESSURE/TEMPERATURE DIAGRAM

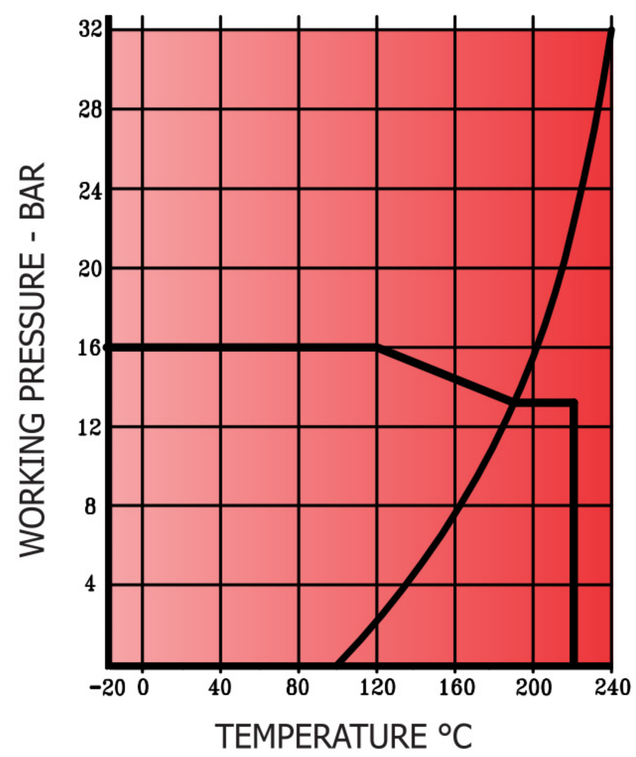

Note : The above data is subject to change without notice due to our continuing product improvement program.

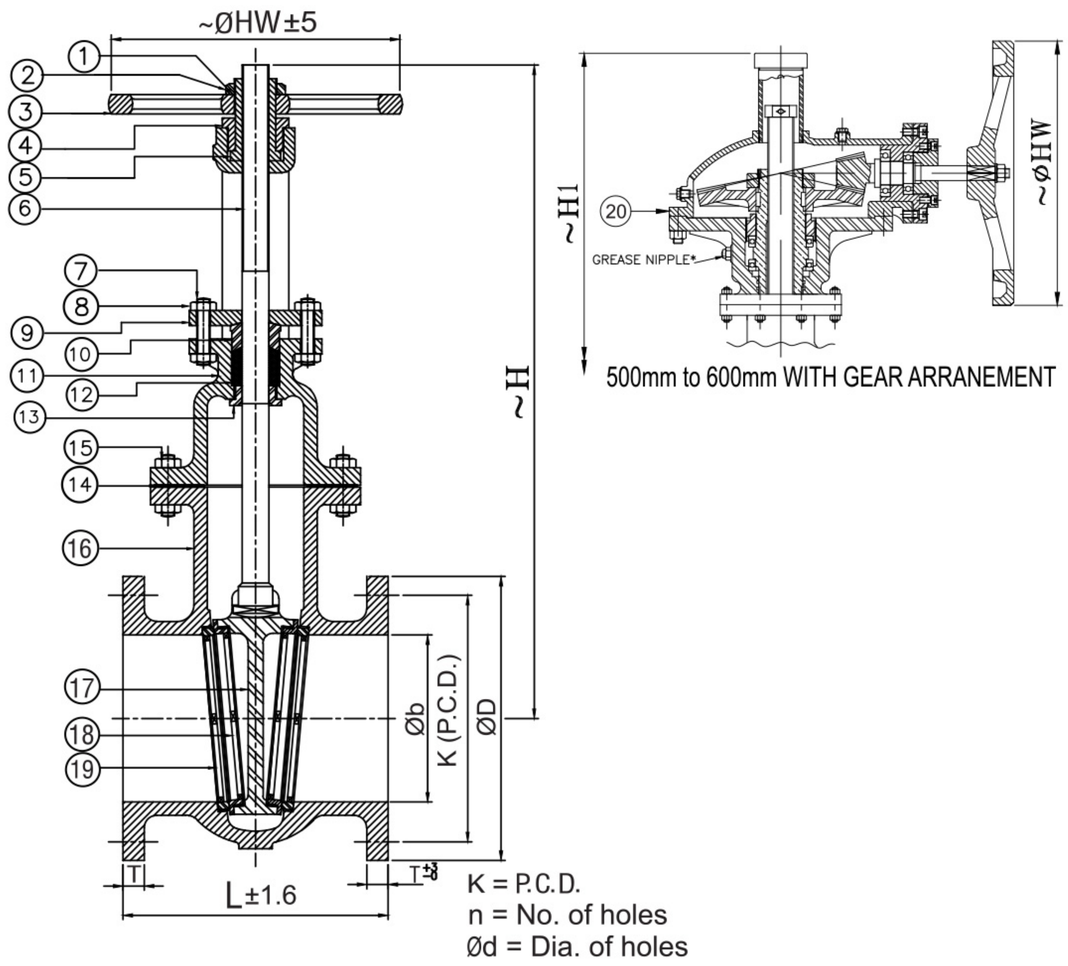

MATERIAL SPECIFICATION

P.No.	NAME OF PART	MATERIAL
1	KEY	CARBON STEEL
2	HAND WHEEL RETAINING NUT	CARBON STEEL (IS 2062 Gr. A)
3	HAND WHEEL	CAST IRON (IS 210 Gr. FG 200)
4	YOKE SLEEVE RETAINING NUT	LEADED TIN BRONZE (IS 318 Gr. LTB2)
5	YOKE SLEEVE	LEADED TIN BRONZE (IS 318 Gr. LTB2)
6	STEM	S.S. (ASTM A276 TYPE 410)
7	GLAND T-HEAD BOLTS	CARBON STEEL (IS 1363)
8	GLAND NUTS	CARBON STEEL (IS 1363)
9	GLAND FLANGE	CAST IRON (IS 210 Gr. FG 200)
10	GLAND FOLLOWER	LEADED TIN BRONZE (IS 318 Gr. LTB2)
11	BONNET	CAST IRON (IS 210 Gr. FG 200)
12	GLAND PACKING	TO SUIT SERVICE CONDITIONS
13	BACK SEAT BUSHING	LEADED TIN BRONZE (IS 318 Gr. LTB2)
14	GASKET	C.N.A.F.
15	BOLTS & NUTS	CARBON STEEL (IS 1363)
16	BODY	CAST IRON (IS 210 Gr. FG 200)
17	WEDGE	CAST IRON (IS 210 Gr. FG 200)
18	WEDGE RING	LEADED TIN BRONZE (IS 318 Gr. LTB2) / S.S. (13% Cr. STEEL)
19	BODY SEAT RING	LEADED TIN BRONZE (IS 318 Gr. LTB2) / S.S. (13% Cr. STEEL)
20	GEAR BOX ASSY	-----

DIMENSIONAL DATA

SIZE (mm)	40	50	65	80	100	125	150	200	250	300	350	400	450	500	550	600
L	165	178	190	203	229	254	267	292	330	356	381	406	432	457	508	508
T	14.3	15.9	17.5	19	23.8	23.8	25.4	28.6	30.2	31.8	34.9	36.5	39.7	42.9	46	47.6
Øb	40	50	65	80	100	125	150	200	250	300	356	406	457	508	550	609
ØD	127	152	178	191	229	255	280	345	406	485	533	597	635	699	749	813
~H	320	365	447	490	496	571	647	831	963	1105	1400	1525	1750	-	-	-
~H1	-	-	-	-	-	-	-	-	-	-	-	-	-	2513	2762	2767
~ØHW	210	225	225	225	320	320	320	360	400	600	560	450	750	450	450	450
K	98	121	140	152	191	216	241	299	362	432	476	540	578	635	692	749
n	4	4	4	4	8	8	8	8	12	12	12	16	16	20	20	20
Ød	19.1	19.1	19.1	19.1	19.1	22.2	22.2	22.2	25.4	25.4	28.6	28.6	31.8	31.8	35	34.9

Note : The above data is subject to change without notice due to our continuing product improvement program.