CAST IRON

REFLUX VALVE

INTRODUCTION

Leader Reflux Valves are designed with high sensitivity to pressure so that the valve closes immediately before significant fluid starts flowing backward. Fluid reversing backward causes damage to equipment like boilers or pumps. The valve is activated by the flowing material in the pipeline. The pressure of the fluid passing through the system opens the valve, while any reversal of flow will close the valve. Closure is accomplished by the weight of the check mechanism, by back pressure. Entirely automatic in action, depending upon differential pressure and velocity of flow within the line to perform their functions of opening and closing.

PRINCIPAL FEATURES

- Design Std.: IS 5312.
- Bolted Cover, Swing Disc design.
- Metal to Metal seating.
- Gun Metal Body & Disc rings.
- Design Prohibits Galling or Scoring of Seating Surfaces.
- One-Piece Disc Construction Designed to Withstand Severe Service Conditions.
- Large Bolted-On Cover Provides Easy Access to Interior for Routine Maintenance.
- Rigid & Sturdy design.
- Long service life as wear is minimal which makes it highly reliable.
- Valve is mechanically automatic and thus it does not need an actuator or valve operator.
- A horizontal or vertical duct can be used, easy to install.
- The valve must be installed in the direction of the flow arrow.
- Flanged ends as per IS:1538 PN-1.6 (FF).
- Widely applied for low-pressure and ambient-temperature utility services such as water supply, power plants, irrigation projects, air conditioning systems as well as fire fighting systems to prevent the back flow.

Item Code:	CI0021
Pressure Rating:	PN-1.6
Testing Standard:	IS 5312
Size Range:	50mm to 500mm
Product Standard:	IS 5312

SUITABLE FOR

Water	Oil	Air	Gases
✓			

END CONNECTION

Flanged ends as per IS:1538 PN-1.6 (FF).
Flange drilling as per other standards also available upon request.

TEST PRESSURE (Hydrostatic)

Rating	PN-1.6
Body (Hyd.)	2.4 MPa
Seat (Hyd.)	1.6 MPa

UTILISATION & SERVICE

"LEADER" Cast Iron Reklux valves are suitable for above-ground installations.
Best suited for potable water, treated fresh water, neutral liquids & some gases.

PRESSURE/TEMPERATURE DIAGRAM

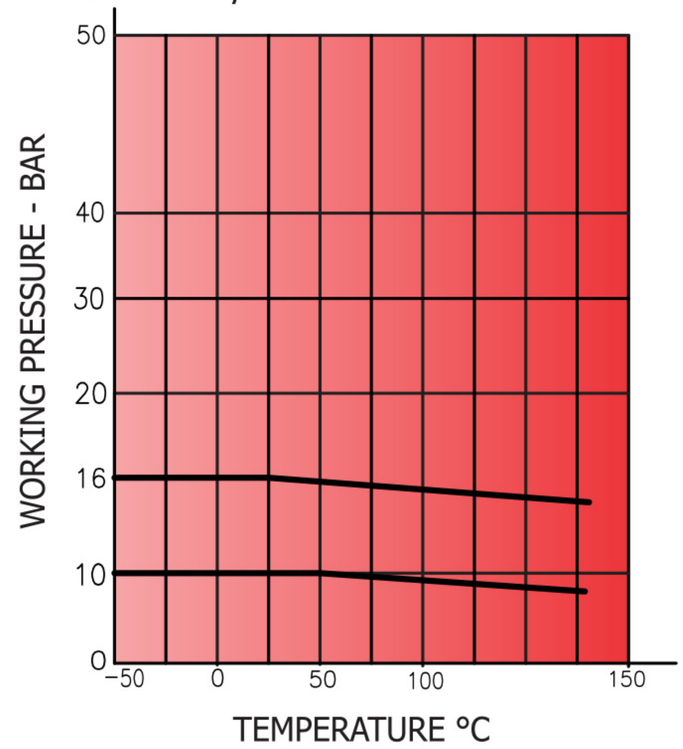

WORKING PRESSURE

Maximum Working Pressure: 16 Bar.
See Pressure / Temperature Diagram.

TEMPERATURE LIMITS

Maximum Working temperature: 45°C.
See Pressure / Temperature Diagram

Note : The above data is subject to change without notice due to our continuing product improvement program.

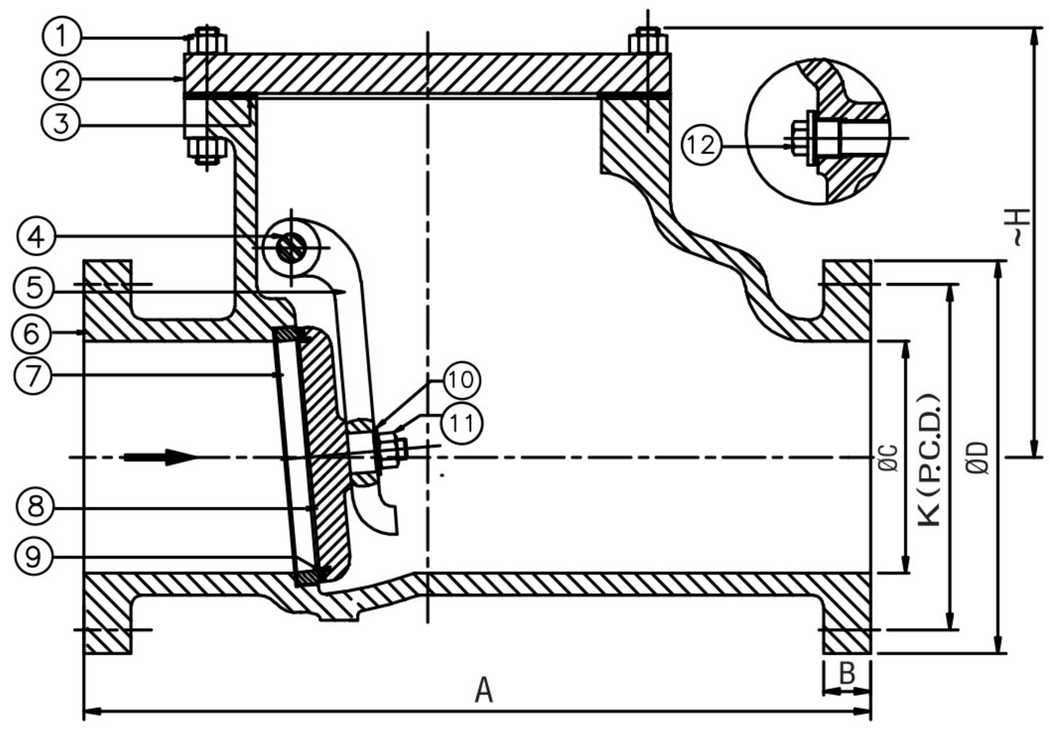

n = No. of holes
Ød = Dia. of holes

MATERIAL SPECIFICATION

P.No.	NAME OF PART	MATERIAL	SPECIFICATION
1	STUDS & NUTS	CARBON STEEL	IS 1363
2	COVER	CAST IRON	IS 210 Gr. FG200
3	GASKET	C.N.A.F. / RUBBER	IS 638 TYPE B
4	HINGE PIN	H.T. BRASS	IS 6912 FHTB1
5	HINGE	CAST IRON	IS 210 Gr. FG200
6	BODY	CAST IRON	IS 210 Gr. FG200
7	SEAT RING	LEADED IN BRONZE	IS 318 LTB2
8	DISC	CAST IRON	IS 210 Gr. FG200
9	DISC RING	LEADED IN BRONZE	IS 318 LTB2
10	WASHER	LEADED IN BRONZE / BRASS	IS 318 LTB2
11	NUT	H.T. BRASS	IS 6912 FHTB1
12	SIDE PLUG	LEADED IN BRONZE	IS 318 LTB2

DIMENSIONAL DATA

SIZE (mm)	50	65	80	100	125	150	200	250	300	350	400	450	500
A	$200^{\pm2}$	$216^{\pm2}$	$241^{\pm2}$	$292^{\pm3}$	$350^{\pm2}$	$356^{\pm2}$	$495^{\pm2}$	$622^{\pm4}$	$698^{\pm4}$	$800^{\pm4}$	$900^{\pm5}$	$1000^{\pm5}$	$1100^{\pm6}$
B	16	16	21	22	23.8	23	24.5	26	27.5	29	30	31.5	33
ØC	50	65	80	100	125	150	200	250	300	350	400	450	500
~H	126	145	154	196	196	204	242	281	337	480	525	620	700
ØD	165	185	200	220	254	285	340	395	445	505	565	615	670
K	125	145	160	180	215.9	240	295	350	400	460	515	565	620
n	4	4	4	8	8	8	8	12	12	16	16	20	20
Ød	19	19	19	19	22.2	23	23	23	23	23	28	28	28

Note : The above data is subject to change without notice due to our continuing product improvement program.