CAST IRON DUAL PLATE CHECK VALVE (FLANGED)

INTRODUCTION

Leader Dual Plate Check Valves are automatic, quick-acting valve designed to prevent the reversal of flow in a piping system. The two valve discs, eccentrically embedded, have springs which force the valve to close in case no pressure is available. The pressure of the fluid passing through the system opens the valve discs, while any reversal of flow will close the valve discs. Closure is accomplished by the spring action and by back pressure.

PRINCIPAL FEATURES

- Design Standard: API 594.
- Retainer-less Construction ensures that they do not drill entirely into the valve body to allow the hinge-pin and the stop-pin to be fitted with a dual-plate check valve. The feature ensures high integrity & tamper-proof design, ensures no leakage from the body.
- Flanged type compact design, to take lesser space than the Reflux / Swing Check Valve.
- Being light in weight has more rugged construction than the standard Swing Type Check Valve, which needs expensive foundation and special supports.
- Less wear and tear of seat surface due to resilient integrally moulded body seating face.
- Stopper pin prevents the discs from coming into contact with each other and thus prevents disc damage. The stopper pin also prevents spring failure by ensuring that the discs don't travel beyond the full-open position.
- Low cracking pressure design (operable at low pressures).
- Independent spring design feature also available which gives less scrubbing of disc & independents movement of discs.
- Inherently non-slamming, no external devices / attachment required.
- Water hammering effect is minimized in this design, since the closing of valve does not depend upon any back pressure or flow.
- Either vertically (only upwards) or horizontally installed.
- Lifting eyebolt option is provided.
- Flanged ends as per ASME B16.1 CL-125 (FF).

Item Code:	CI0086,	CI086A
Disc:	Ductile Iron,	SS(CF8)
Pressure Rating:	PN-16	
Testing Standard:	API 598	
Size Range:	40mm to 900mm	
Product Standard:	API 594	

SUITABLE FOR

Water	Oil	Air	Gases	Steam
✓		✓		

END CONNECTION

Flanged ends as per ASME B16.1 CL-125 (FF).
Flange drilling as per other standards also available upon request.

TEST PRESSURE (Hydrostatic)

Rating	PN-16
Body (Hyd.)	24 Bar
Seat (Hyd.)	17.6 Bar

UTILISATION & SERVICE

"LEADER" Cast Iron Dual Plate Check Valve are suitable for above-ground installations.
Best suited for water, HVAC, fire-fighting, compressed air service.

WORKING PRESSURE & TEMPERATURE LIMITS

Maximum Working Pressure: 16 Bar.
Maximum Working temperature: 120°C.
See Pressure / Temperature Diagram.

PRESSURE/TEMPERATURE DIAGRAM

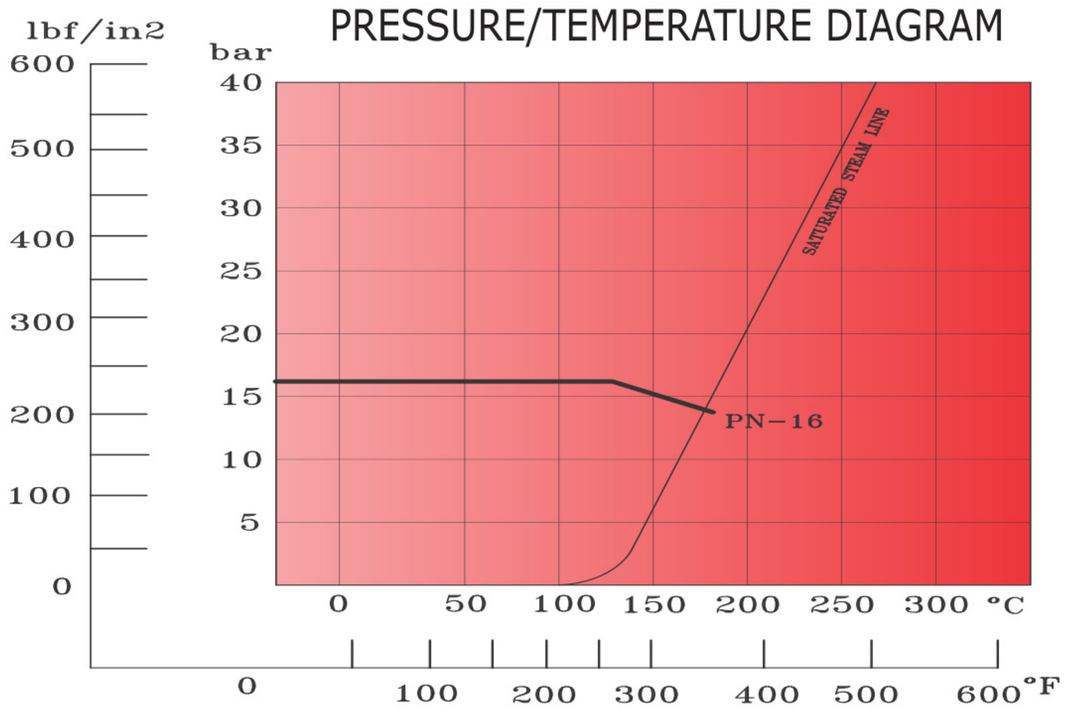

Note : The above data is subject to change without notice due to our continuing product improvement program.

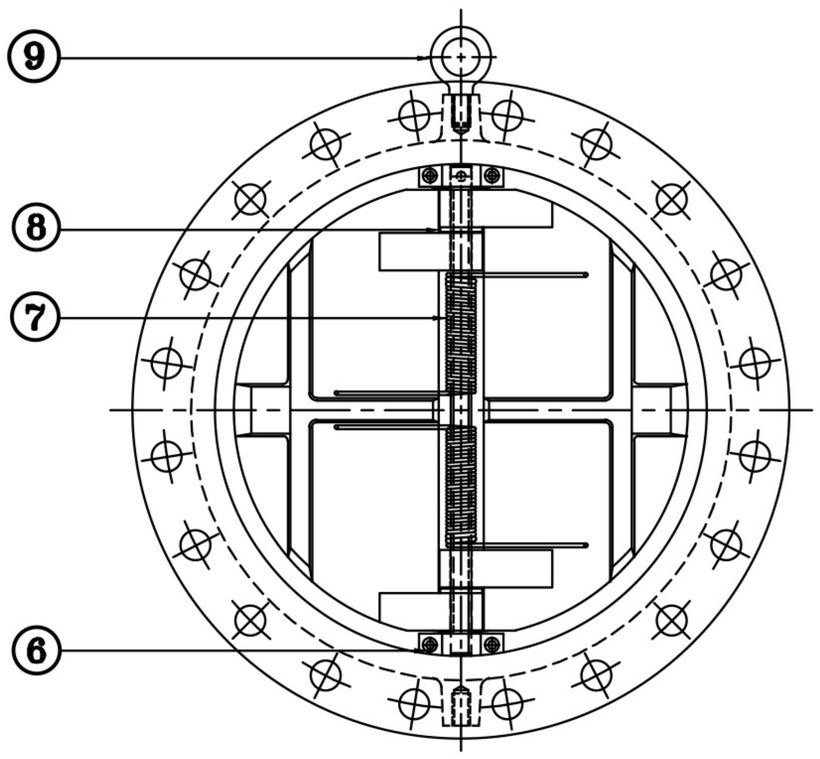

MATERIAL SPECIFICATION

P.No.	NAME OF PART	MATERIAL	SPECIFICATION
1	BODY	CAST IRON	BSEN 1561 Gr. FG260
2	DISC	D.I. / S.S.	ASTM A395 / ASTM A351 Gr. CF8
3	DISC HOLDING PIN	STAINLESS STEEL	ASTM A276 TYPE 410
4	STOPPER PIN	STAINLESS STEEL	ASTM A276 TYPE 410
5	DISC HOLDING PLATE	CAST CARBON STEEL	ASTM A216 Gr. WCB
6	L-KEY SCREW	AISI 304	
7	SPRING	TYPE 316	
8	BUSH	STAINLESS STEEL	ASTM A276 TYPE 304
9	EYE BOLT	CARBON STEEL	ANY GRADE
10	SEAT	BUNA-N / EPDM	

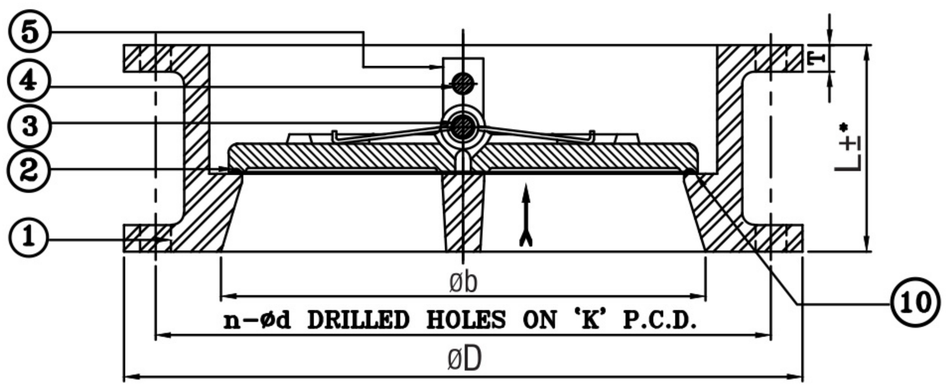

DESIGN FOR 4" & ABOVE

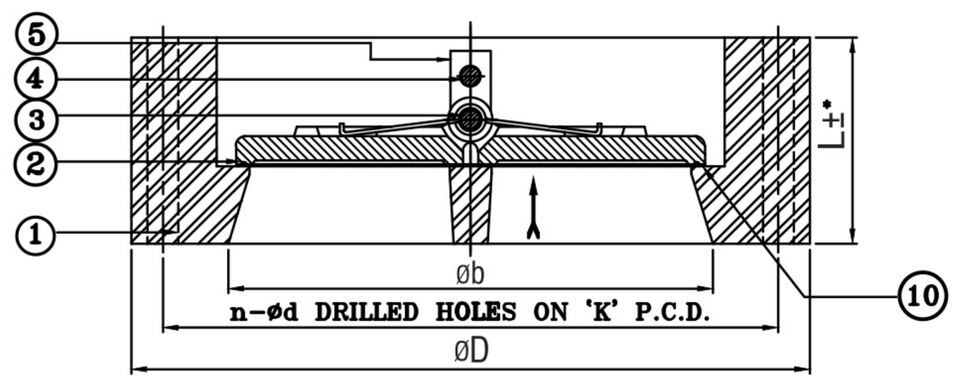

DESIGN UPTO 3" LUG TYPE

DIMENSIONAL DATA

SIZE (mm)	40	50	65	80	100	125	150	200	250	300	350	400	450	500	600	650	700	750	800	900
L	$54^{\pm2}$	$54^{\pm2}$	$60^{\pm2}$	$67^{\pm2}$	$67^{\pm2}$	$83^{\pm2}$	$95^{\pm2}$	$127^{\pm2}$	$140^{\pm2}$	$181^{\pm3}$	$184^{\pm3}$	$191^{\pm3}$	$203^{\pm3}$	$213^{\pm3}$	$222^{\pm3}$	$305^{\pm3}$	$305^{\pm3}$	$305^{\pm3}$	$305^{\pm3}$	$368^{\pm3}$
Øb	40	50	65	80	100	125	150	200	250	300	350	400	450	500	600	650	700	750	777	900
ØD	125	150	180	190	230	255	280	345	405	485	535	595	635	700	815	785	835	885	940	1055
n	4	4	4	4	8	8	8	8	12	12	12	16	16	20	20	36	40	44	48	44
Ød	15.8	19.1	19.1	19.1	19.1	22.2	22.2	22.2	25.4	25.4	28.6	28.6	31.8	31.8	35	22.2	22.2	22.2	22.2	25.4
K	98	121	140	152	191	216	241	299	362	432	476	540	578	635	749	744.5	795.3	846.1	900.1	1009.6
T	-	-	-	-	23.8	23.8	25.4	28.6	30.2	31.8	35.1	36.5	39.7	42.9	47.6	43	46.2	49.3	52.5	57.3