# CAST IRON

# 'Y' TYPE STRAINER

## INTRODUCTION

Leader 'Y' type Strainer offers best solution for separation and segregation for pump protection, flow meter protection, valves protection, regulator protections. In water handling equipments it works to save from damage through sand or any other solid particles.

## PRINCIPAL FEATURES

- Designed to manufacturer standard.
- Y' Type pattern, Bolted Cover.
- SS (Type 304) Screen Having 1mm Dia Perforation snugly fitted on machined surface to ensure no particle larger than the screen opening can escape around the end of the screen.
- Filtration area approximately 3 time more than flow bore area of the body.
- Body cavity with largest possible filtration area to counter decrease in flow rate caused by clogging.
- Fine finish and smooth contours of flow way reduce the pressure drop.
- Screen is guided both in body and cover.
- Strainer may be installed in vertical lines and horizontal lines with effectiveness.
- Drain plug is provided on the valve to drain out the foreign particles accumulated in the strainer.
- Flanged ends to BS:10 Table 'E' (FF).

## END CONNECTION

Flanges as per BS:10 Table 'E'( FF) Drilled.
Flange drilling as per other standards also available upon request.

## UTILISATION & SERVICE

"LEADER" Cast Iron 'Y' Type Strainer are suitable for above-ground installations.
Best suited for potable water, treated fresh water, neutral liquids & some gases.

## WORKING PRESSURE

Maximum Working Pressure: 16 Bar.
See Pressure / Temperature Diagram.

## TEMPERATURE LIMITS

Maximum Working temperature: 220°C.
See Pressure / Temperature Diagram.

| | |
|---|---|
| **Item Code:** | CI0093 |
| **Pressure Rating:** | PN-16 |
| **Testing Standard:** | Mfg. Standard |
| **Size Range:** | 40mm to 300mm |
| **Product Standard:** | Mfg. Standard |

## SUITABLE FOR

| Water | Oil | Air | Gases | Steam |
|---|---|---|---|---|
| ✓ | | ✓ | | |

## TEST PRESSURE (Hydrostatic)

| Rating | PN-16 |
|---|---|
| Body (Hyd.) | 24 Bar |

PRESSURE/TEMPERATURE DIAGRAM

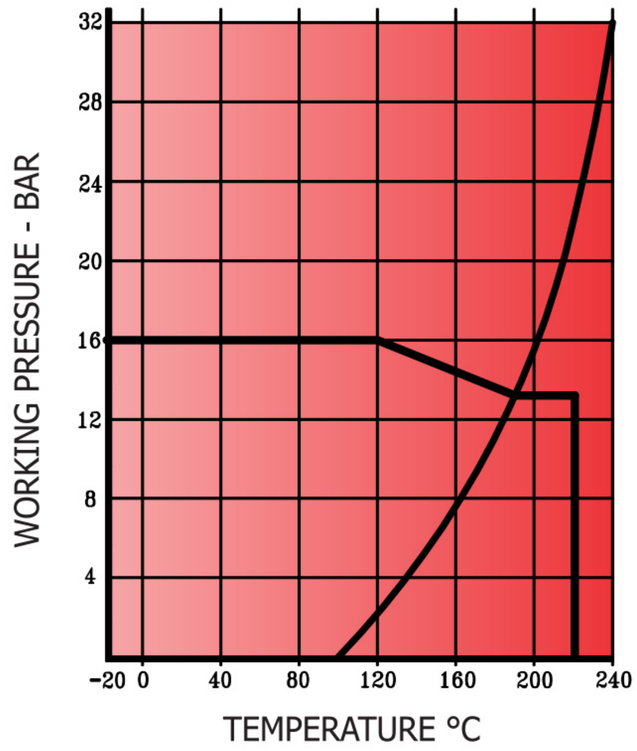


Note : The above data is subject to change without notice due to our continuing product improvement program.

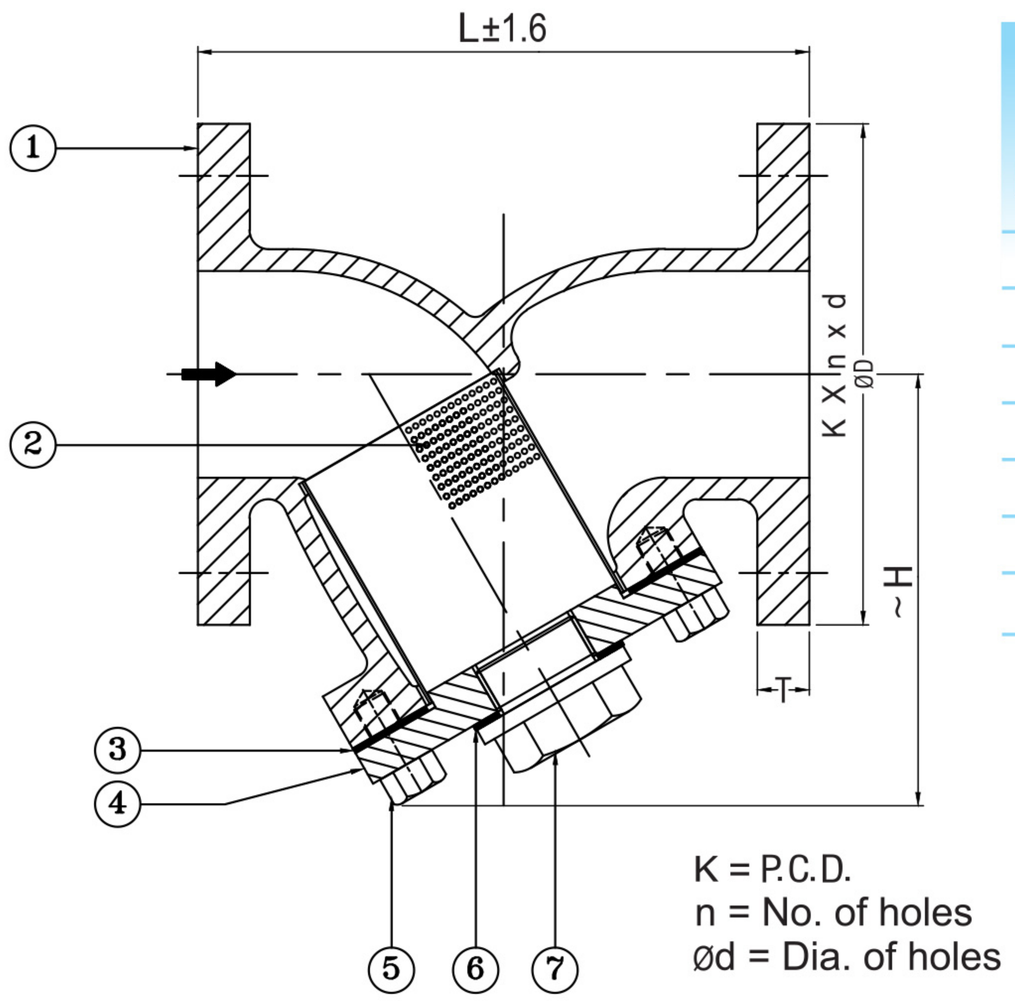


## MATERIAL SPECIFICATION

| P.No. | NAME OF PART | MATERIAL | SPECIFICATION |
|---|---|---|---|
| 1 | BODY | CAST IRON | BSEN 1561 Gr. 200 |
| 2 | SCREEN | STAINLESS STEEL | TYPE 304 |
| 3 | GASKET | C.N.A.F. | IS 2712 Gr. C |
| 4 | COVER | CAST IRON | BSEN 1561 Gr. 200 |
| 5 | BOLTS | CARBON STEEL | BS 4190 |
| 6 | GASKET | C.N.A.F. | ----- |
| 7 | DRAIN PLUG | CAST IRON | BSEN 1561 Gr. GJL 200 |

## DIMENSIONAL DATA

| SIZE (mm) | | 40 | 50 | 65 | 80 | 100 | 125 | 150 | 200 | 250 | 300 |
|---|---|---|---|---|---|---|---|---|---|---|---|
| L | ±1.6 | 145 | 180 | 200 | 225 | 283 | 325 | 360 | 440 | 510 | 593 |
| T | | 15.9 | 19.1 | 19.1 | 19.1 | 22.2 | 22.2 | 22.2 | 25.4 | 25.4 | 28.6 |
| ØD | | 133.5 | 152.4 | 165.1 | 184.1 | 216 | 254 | 279.4 | 336.5 | 406.4 | 457.2 |
| ~H | | 103 | 126 | 137 | 158 | 210 | 247 | 280 | 380 | 441 | 521 |
| K | | 98.4 | 114.3 | 127 | 146 | 184.1 | 209.5 | 235 | 292.1 | 355.6 | 406.4 |
| Ød | | 14.3 | 17.5 | 17.5 | 17.5 | 17.5 | 17.5 | 22.3 | 22.3 | 22.3 | 25.4 |
| n | | 4 | 4 | 4 | 4 | 8 | 8 | 8 | 8 | 12 | 12 |

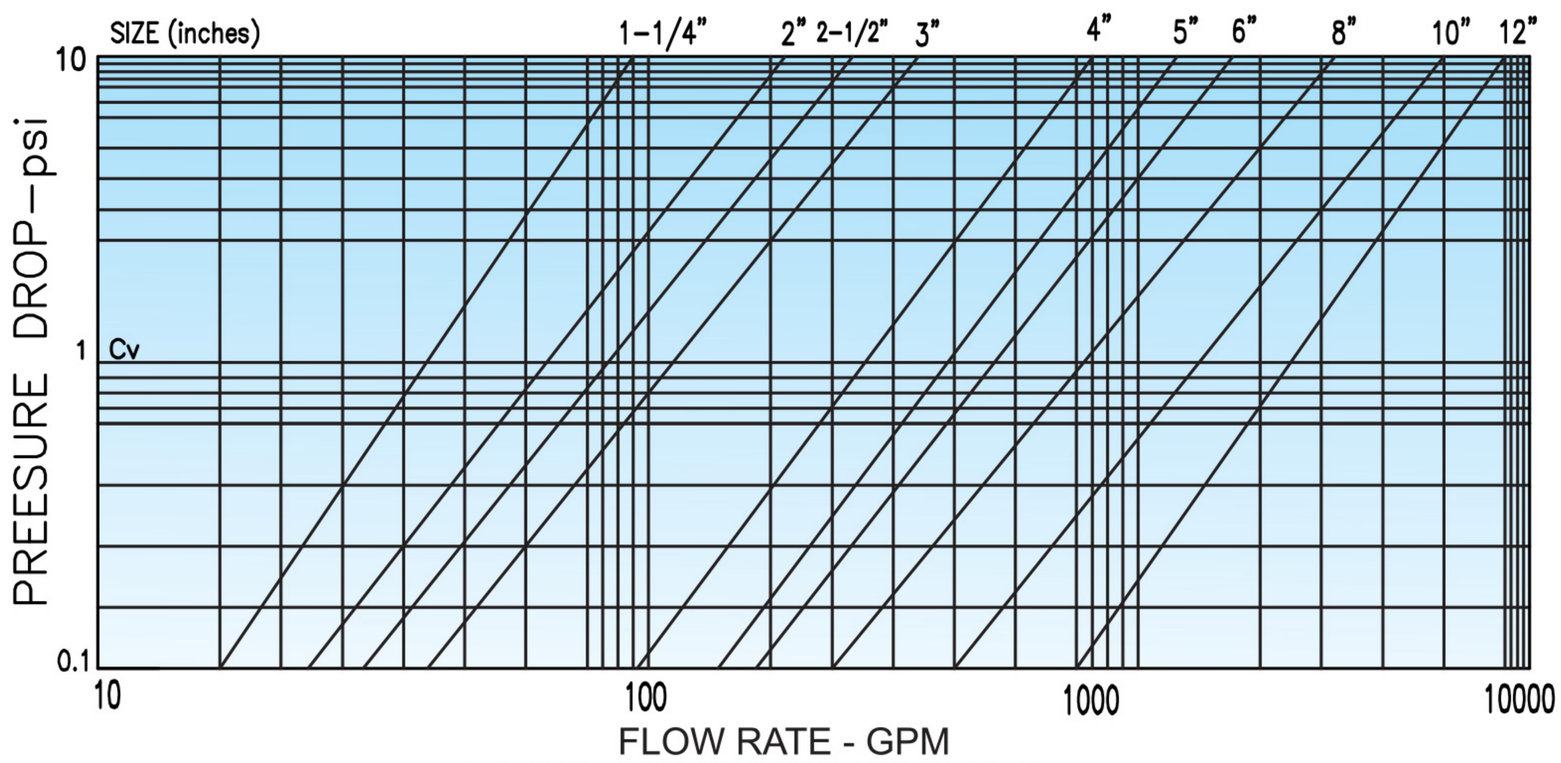


(PRESSURE DROP CURVE ARE BASED ON WATER FLOW WITH STANDARD SCREENS)

Note : The above data is subject to change without notice due to our continuing product improvement program.