DUCTILE IRON

SLUICE VALVE

INTRODUCTION

Leader Ductile Iron Sluice Valves (Non-Rising Spindle) are best suited for services that require infrequent valve operation, and where the wedge is kept either fully opened or fully closed. It offers the ultimate in dependable service wherever minimum pressure drop is important.

PRINCIPAL FEATURES

- Designed as per IS:14846.
- Bolted Bonnet, Inside screw, Non Rising Stem.
- Solid Wedge, Metal to Metal seating.
- Body & Bonnet castings made of superior Ductile Iron ASTM A395 grade to ensure additional strength.
- Gun Metal Body & Wedge rings, Stainless Steel Stem.
- Compact & rigid structure.
- Provided full flow with minimal pressure drop.
- Small opening and closing torque.
- Using Non-Asbestos packing, reliable sealing, light and flexible operation.
- Robust construction of hand wheel in open spoke design.
- Provision for re-packing under pressure in the installed condition.
- Easy visual control of open / closed position marked on the hand wheel.
- Operation mode manual, gear, electric, pneumatic.
- Available with open-shut indicator & locking arrangement on request.
- Flanged ends as per ASME B16.5 CL-150 (FF).
- Widely used in water distribution, power plants and pipeline for access or cut off the medium pipeline opening and closing devices.

END CONNECTION

Flanges as per ASME B16.5 CL-150 (FF), Drilled.
Flange drilling as per other standards also available upon request.

UTILISATION & SERVICE

"LEADER" Ductile Iron Sluice valves are suitable for above-ground installations.
Best suited for potable water, treated fresh water, neutral liquids & some gases.

WORKING PRESSURE

Maximum Working Pressure: 20 Bar.
See Pressure / Temperature Diagram.

TEMPERATURE LIMITS

Maximum Working temperature: 220ºC.
See Pressure / Temperature Diagram.

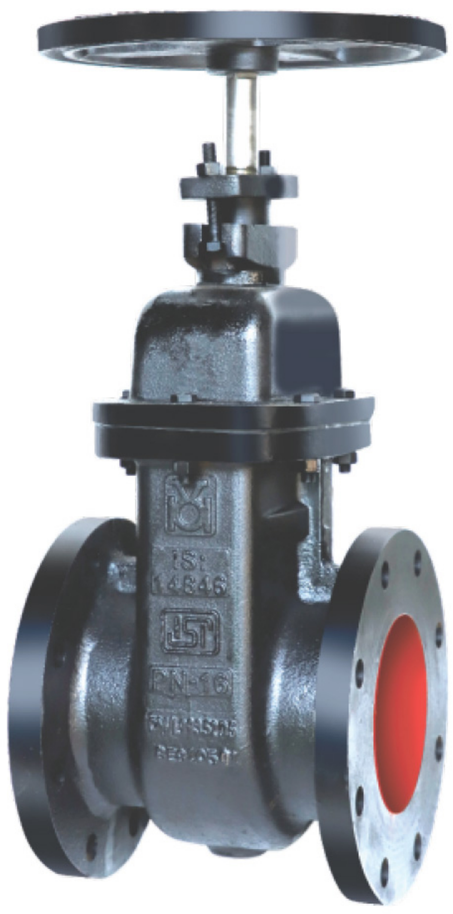

Item Code:	DI0043
Pressure Rating:	PN-20
Testing Standard:	As per IS 14846
Size Range:	50mm to 250mm
Product Standard:	As per IS 14846

SUITABLE FOR

Water	Oil	Air	Gases	Steam
✓	✓	✓		

TEST PRESSURE (Hydrostatic)

Rating	PN-20
Body (Hyd.)	30 Bar
Seat (Hyd.)	22 Bar

PRESSURE/TEMPERATURE DIAGRAM

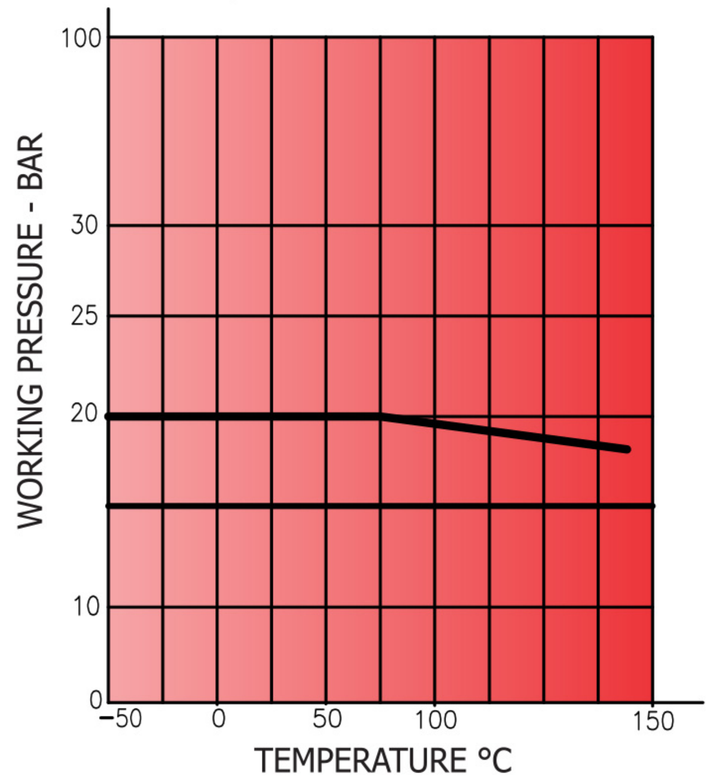

Note : The above data is subject to change without notice due to our continuing product improvement program.

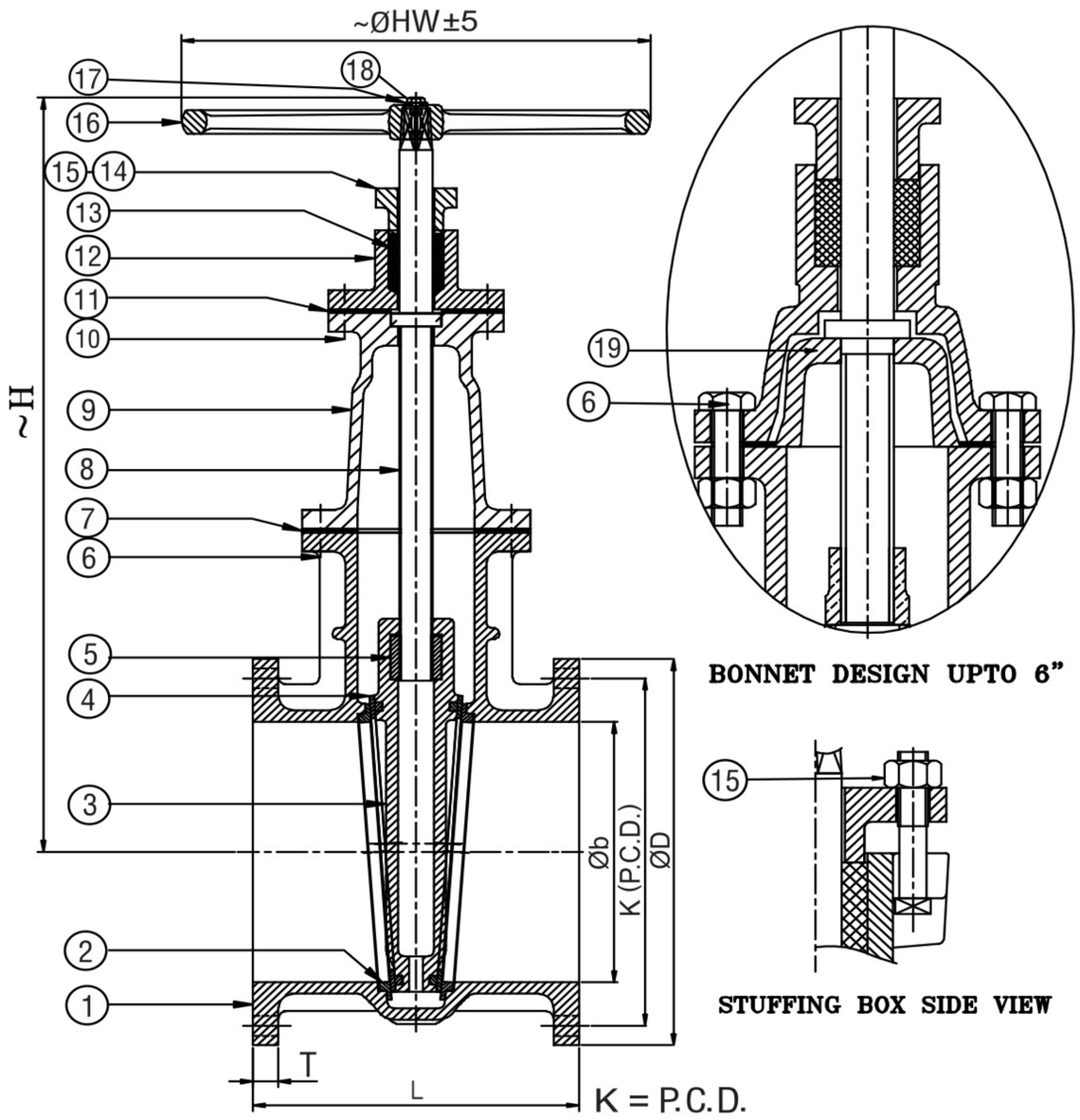

K = P.C.D.
n = No. of holes
Ød = Dia. of holes

MATERIAL SPECIFICATION

P.No.	NAME OF PART	MATERIAL	SPECIFICATION
1	BODY	DUCTILE IRON	ASTM A395
2	BODY RING	GUN METAL	IS 2062 Gr. A
3	WEDGE	DUCTILE IRON	ASTM A395
4	WEDGE RING	GUN METAL	IS 318 Gr.LTB2
5	WEDGE NUT	GUN METAL	IS 318 Gr.LTB2
6	BOLTS & NUTS	CARBEN STEEL	IS 1363 CLASS 4 & 4.6
7	GASKET	RUBBER	IS 638 TYPE B
8	STEM	STAINLESS STEEL	IS 6603
9	BONNET	DUCTILE IRON	ASTM A395
10	BOLTS & NUTS	CARBEN STEEL	IS 1363 CLASS 4 & 4.6
11	GASKET	RUBBER	IS 638 TYPE B
12	STUFFING BOX	DUCTILE IRON	ASTM A395
13	PACKING	HEMP & JUTE	IS 5414
14	GLAND	DUCTILE IRON	ASTM A395
15	T-BOLTS & NUTS	CARBON STEEL	IS 1363 CLASS 4 & 4.6
16	HAND WHEEL	DUCTILE IRON	ASTM A395
17	WASHER	CARBEN STEEL	------
18	SCREW FOR HAND WHEEL	CARBEN STEEL	------
19	THRUST PLATE	DUCTILE IRON	ASTM A395

DIMENSIONAL DATA CLASS

SIZE (mm)	50	65	80	100	125	150	200	250	300
L±2	178	190	203	229	254	267	292	330	356
T	16.3	17.9	19.5	24.3	24.3	25.9	29	30.6	32.2
Øb	50	65	80	100	125	150	200	250	300
K	120.7	139.7	152.4	190.5	215.9	241.3	298.5	362	431.8
ØD	150	180	190	230	255	280	345	405	485
~H	341	360	366	432	504	510	684	784	869
ØHW ±5	280	280	280	360	360	360	450	640	640
n	4	4	4	8	8	8	8	12	12
dØ	19	19	19	19	22.2	22.2	22.2	25.4	25.4

Note : The above data is subject to change without notice due to our continuing product improvement program.