DUCTILE IRON

DUAL PLATE CHECK VALVE

INTRODUCTION

Leader Ductile Dual Plate Check Valves are automatic, quick-acting valve designed to prevent the reversal of flow in a piping system. The two valve discs, eccentrically embedded, have springs which force the valve to close in case no pressure is available. The pressure of the fluid passing through the system opens the valve discs, while any reversal of flow will close the valve discs. Closure is accomplished by the spring action and by back pressure.

PRINCIPAL FEATURES

- Design Standard: API 594.
- Retainer-less Construction ensures that they do not drill entirely into the valve body to allow the hinge-pin and the stop-pin to be fitted with a dual-plate check valve. The feature ensures high integrity & tamper-proof design, ensures no leakage from the body.
- Body & Disc castings made of superior Ductile Iron ASTM A395 grade to ensure additional strength.
- Wafer type design, to take lesser space than the Reflux / Swing Check Valve.
- Being light in weight, has more rugged construction than the standard Swing Type Check Valve, which needs expensive foundation and special supports.
- Less wear and tear of seat surface due to resilient integrally moulded body seating face.
- Stopper pin prevents the discs from coming into contact with each other and thus prevents disc damage. The stopper pin also prevents spring failure by ensuring that the discs don't travel beyond the full-open position.
- Low cracking pressure design (operable at low pressures).
- Independent spring design feature also available which gives less scrubbing of disc & independents movement of discs.
- Inherently non-slamming, no external devices / attachment required.
- Water hammering effect is minimized in this design, since the closing of valve does not depend upon any back pressure or flow.
- Either vertically (only upwards) or horizontally installed.
- Lifting eyebolt option is provided.

END CONNECTION

Wafer type Suitable for clamping between flanges as per BSEN 1092 PN-25.
Suitability for insertion between other flange standards also available upon request.

UTILISATION & SERVICE

Best suited for water, HVAC, fire-fighting, compressed air application.

WORKING PRESSURE & TEMPERATURE LIMITS

Maximum Working Pressure: 25 Bar.
Maximum Working temperature: 120°C.
See Pressure / Temperature Diagram.

Item Code:	DI0084
Pressure Rating:	PN-25
Testing Standard:	API 598
Size Range:	50mm to 300mm
Product Standard:	API 594

SUITABLE FOR

Water	Oil	Air	Gases	Steam
✓		✓		

TEST PRESSURE (Hydrostatic)

Rating	PN-25
Body (Hyd.)	37.5 Bar
Seat (Hyd.)	27.5 Bar

PRESSURE/TEMPERATURE DIAGRAM

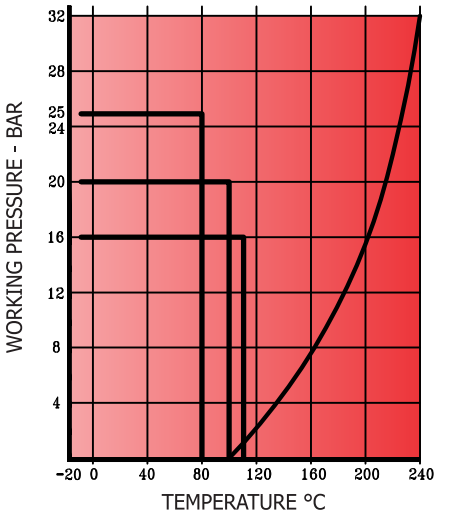

Note : The above data is subject to change without notice due to our continuing product improvement program.

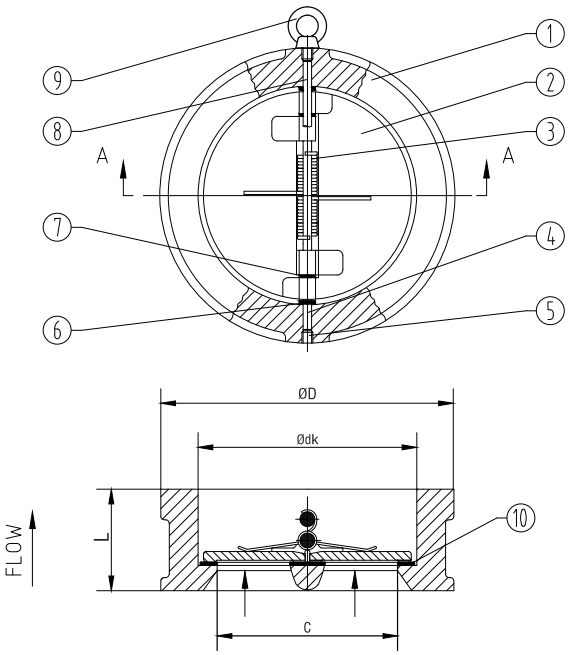

Design for size upto 250mm

MATERIAL SPECIFICATION

P.No.	NAME OF PART	MATERIAL
1	BODY	D.I. (ASTM A395)
2	DISC	C.S.S. (ASTM A351 Gr. CF8)
3	SPRING	STAINLESS STEEL 316
4	DISC HOLDER PIN	SS 416
5	PLUG	CARBON STEEL
6	BODY BEARING	PTFE
7	SPRING BEARING	PTFE
8	STOP PIN	SS 416
9	EYE BOLT (DN 150-250)	CARBON STEEL
10	BODY SEAT	EPDM

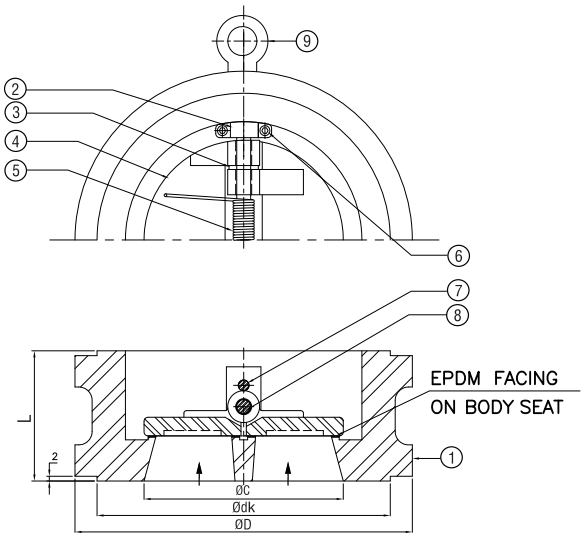

Design for size 300mm and above

MATERIAL SPECIFICATION

P.No.	NAME OF PART	MATERIAL
1	BODY	D.I. (ASTM A395)
2	DISC HOLDING PLATE	C.C.S. (ASTM A216 Gr. WCB)
3	BUSH	S.S. (ASTM A276 TYPE 304)
4	DISC	C.S.S. (ASTM A351 Gr. CF8)
5	SPRING	SS TYPE 316
6	L-KEY BOLT	SS TYPE 316
7	STOPPER PIN	S.S. (ASTM A276 TYPE 410)
8	DISC HOLDER PLATE	S.S. (ASTM A276 TYPE 410)
9	EYE BOLT	CARBON STEEL (IS 2062)

DIMENSIONAL DATA

SIZE (mm)	50	65	80	100	125	150	200	250	300
L	54	54	65	64	71	76	92	114	181
ØC	42	57	68	84	114	133	181	215	300
ØD	107	127	142	162	192	218	273	328	403.5
Ødk	67	82	96	119	147	172	226	267	381

Note : The above data is subject to change without notice due to our continuing product improvement program.