DUCTILE IRON

DUAL PLATE CHECK VALVE

INTRODUCTION

Leader Ductile Dual Plate Check Valves are automatic, quick-acting valve designed to prevent the reversal of flow in a piping system. The two valve discs, eccentrically embedded, have springs which force the valve to close in case no pressure is available. The pressure of the fluid passing through the system opens the valve discs, while any reversal of flow will close the valve discs. Closure is accomplished by the spring action and by back pressure.

PRINCIPAL FEATURES

- Design Standard: API 594.
- Retainer-less Construction ensures that they do not drill entirely into the valve body to allow the hinge-pin and the stop-pin to be fitted with a dual-plate check valve. The feature ensures high integrity & tamper-proof design, ensures no leakage from the body.
- Body & Disc castings made of superior Ductile Iron ASTM A395 grade to ensure additional strength.
- Wafer type design, to take lesser space than the Reflux / Swing Check Valve.
- Being light in weight, has more rugged construction than the standard Swing Type Check Valve, which needs expensive foundation and special supports.
- Less wear and tear of seat surface due to resilient integrally moulded body seating face.
- Stopper pin prevents the discs from coming into contact with each other and thus prevents disc damage. The stopper pin also prevents spring failure by ensuring that the discs don't travel beyond the full-open position.
- Low cracking pressure design (operable at low pressures).
- Independent spring design feature also available which gives less scrubbing of disc & independents movement of discs.
- Inherently non-slamming, no external devices / attachment required.
- Water hammering effect is minimized in this design, since the closing of valve does not depend upon any back pressure or flow.
- Either vertically (only upwards) or horizontally installed.
- Lifting eyebolt option is provided.

END CONNECTION

Wafer type Suitable for clamping between flanges as per BSEN 1092 PN-25.
Suitability for insertion between other flange standards also available upon request.

UTILISATION & SERVICE

Best suited for water, HVAC, fire-fighting, compressed air application.

WORKING PRESSURE & TEMPERATURE LIMITS

Maximum Working Pressure: 25 Bar.
Maximum Working temperature: 120°C.
See Pressure / Temperature Diagram.

Item Code:	DI0084
Pressure Rating:	PN-25
Testing Standard:	API 598
Size Range:	50mm to 300mm
Product Standard:	API 594

SUITABLE FOR

Water	Oil	Air	Gases	Steam
✓		✓		

TEST PRESSURE (Hydrostatic)

Rating	PN-25
Body (Hyd.)	37.5 Bar
Seat (Hyd.)	27.5 Bar

PRESSURE/TEMPERATURE DIAGRAM

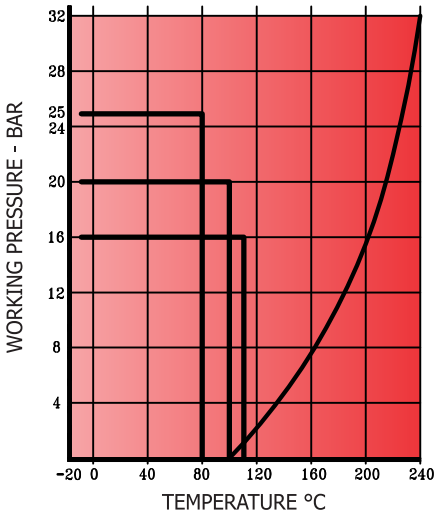

Note : The above data is subject to change without notice due to our continuing product improvement program.

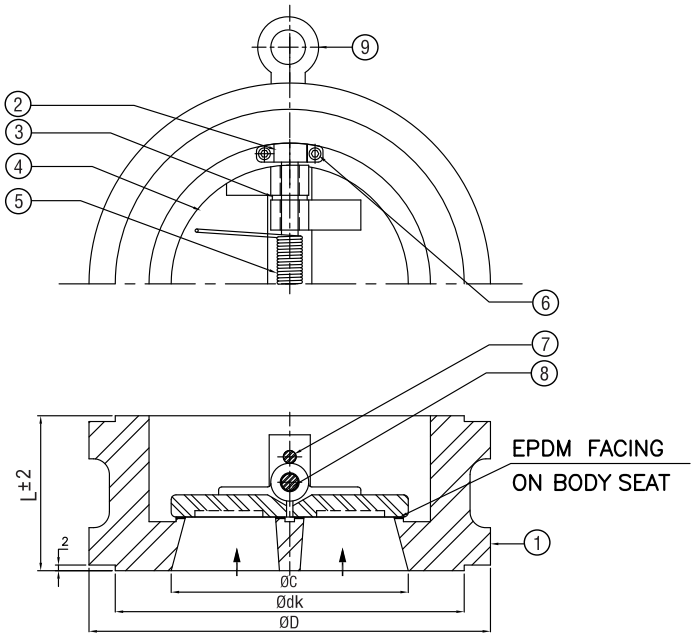

MATERIAL SPECIFICATION

P.No.	NAME OF PART	MATERIAL	SPECIFICATION
1	BODY	DUCTILE IRON	ASTM A395
2	DISC HOLDING PLATE	CAST CARBON STEEL	ASTM A216 Gr. WCB
3	BUSH	STAINLESS STEEL	ASTM A276 TYPE 304
4	DISC	STAINLESS STEEL	ASTM A351 Gr. CF8
5	SPRING	STAINLESS STEEL	TYPE 316
6	L-KEY BOLT	STAINLESS STEEL	TYPE 316
7	STOPPER PIN	STAINLESS STEEL	ASTM A276 TYPE 410
8	DISC HOLDER PIN	STAINLESS STEEL	ASTM A276 TYPE 410
9	EYE BOLT	CARBON STEEL	IS 2062

DIMENSIONAL DATA CLASS

SIZE (mm)	50	65	80	100	125	150	200	250	300
$L^{\pm2}$	60	67	73	73	83	98	127	146	$181^{\pm3}$
ØC	50	65	70	99	125	150	200	250	300
ØD	101	119	130	167	190	214	273	334	403.5
Ødk	92	104.8	–	157.4	185.7	–	269.7	324	381

Note : The above data is subject to change without notice due to our continuing product improvement program.