DUCTILE IRON

'Y' TYPE STRAINER

INTRODUCTION

Leader Ductile Iron 'Y' type Strainer offers best solution for separation and segregation for pump protection, flow meter protection, valves protection, regulator protections. In water handling equipments it works to save from damage through sand or any other solid particles.

PRINCIPAL FEATURES

- Designed to manufacturer standard.
- 'Y' Type pattern, Bolted in Cover.
- Body castings made of superior Ductile Iron ASTM A395 grade to ensure additional strength.
- SS (Type 304) Screen Having 1mm Dia Perforation snugly fitted on machined surface to ensure no particle larger than the screen opening can escape around the end of the screen.
- Filtration area approximately 3 time more than flow bore area of the body.
- Body cavity with largest possible filtration area to counter decrease in flow rate caused by clogging.
- Fine finish and smooth contours of flow way reduce the pressure drop.
- Screen is guided both in body and cover.
- Strainer may be installed in vertical lines and horizontal lines with effectiveness.
- Drain plug is provided on the valve to drain out the foreign particles accumulated in the strainer.
- Flanges as per BSEN 1092 PN-25 (FF).

END CONNECTION

Flanges as per BSEN 1092 PN-25 (FF) Drilled.
Flange drilling as per other standards also available upon request.

UTILISATION & SERVICE

"LEADER" Ductile Iron 'Y' Type Strainer are suitable for above-ground installations.
Best suited for potable water, treated fresh water, neutral liquids & some gases.

WORKING PRESSURE

Maximum Working Pressure: 25 Bar.
See Pressure / Temperature Diagram.

TEMPERATURE LIMITS

Maximum Working temperature: 220°C.
See Pressure / Temperature Diagram.

Item Code:	DI0077
Pressure Rating:	PN-25
Testing Standard:	Mfg. Standard
Size Range:	40mm to 200mm
Product Standard:	Mfg. Standard

SUITABLE FOR

Water	Oil	Air	Gases	Steam
✓		✓		

TEST PRESSURE (Hydrostatic)

Rating	PN-25
Body (Hyd.)	37.5 Bar

PRESSURE/TEMPERATURE DIAGRAM

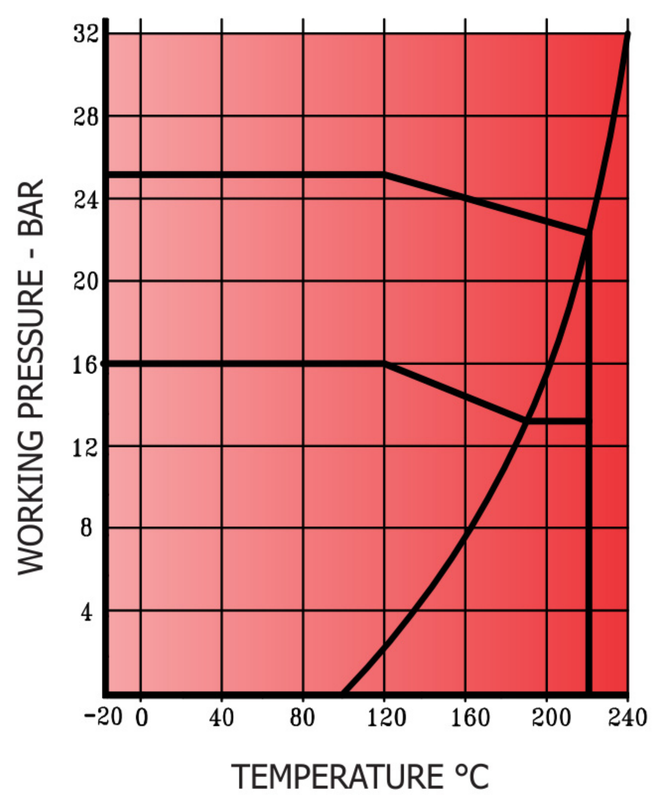

Note : The above data is subject to change without notice due to our continuing product improvement program.

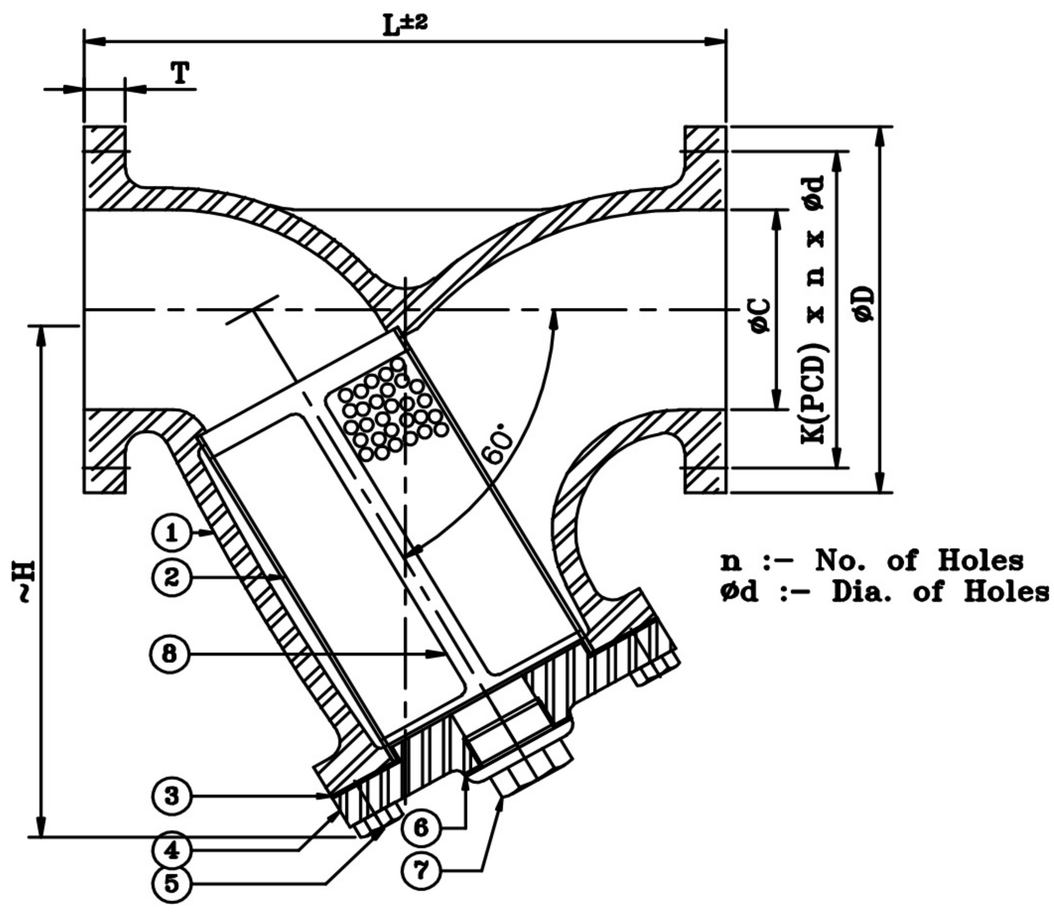

MATERIAL SPECIFICATION

P.No.	NAME OF PART	MATERIAL	SPECIFICATION
1	BODY	DUCTILE IRON	ASTM A395
2	SCREEN (40 MESH)	STAINLESS STEEL	TYPE 304 1MM DIA PERFORATION
3	GASKET	C.N.A.F.	
4	COVER	DUCTILE IRON	ASTM A395
5	STUDS / NUTS	ALLOY STEEL	ASTM A193 Gr. B7 / ASTM A193 Gr.2H
6	GASKET	C.N.A.F.	
7	DRAIN PLUG	STAINLESS STEEL	ASTM A 276 TYPE 410
8	CAGE	FABRICATED	

DIMENSIONAL DATA

SIZE (mm)	40	50	65	80	100	125	150	200
L ±2	176	209	248	270	314	381	451	522
T	18	20	22	24	24	26	28	30
ØC	38	51	63.5	76	101.6	127	152.5	203
ØD	150	165	185	200	235	270	300	360
~H	122	162	187	205	267	326	401	470
K	110	125	145	160	190	220	250	310
n	4	4	8	8	8	8	8	12
Ød	18	18	18	18	22	26	26	26

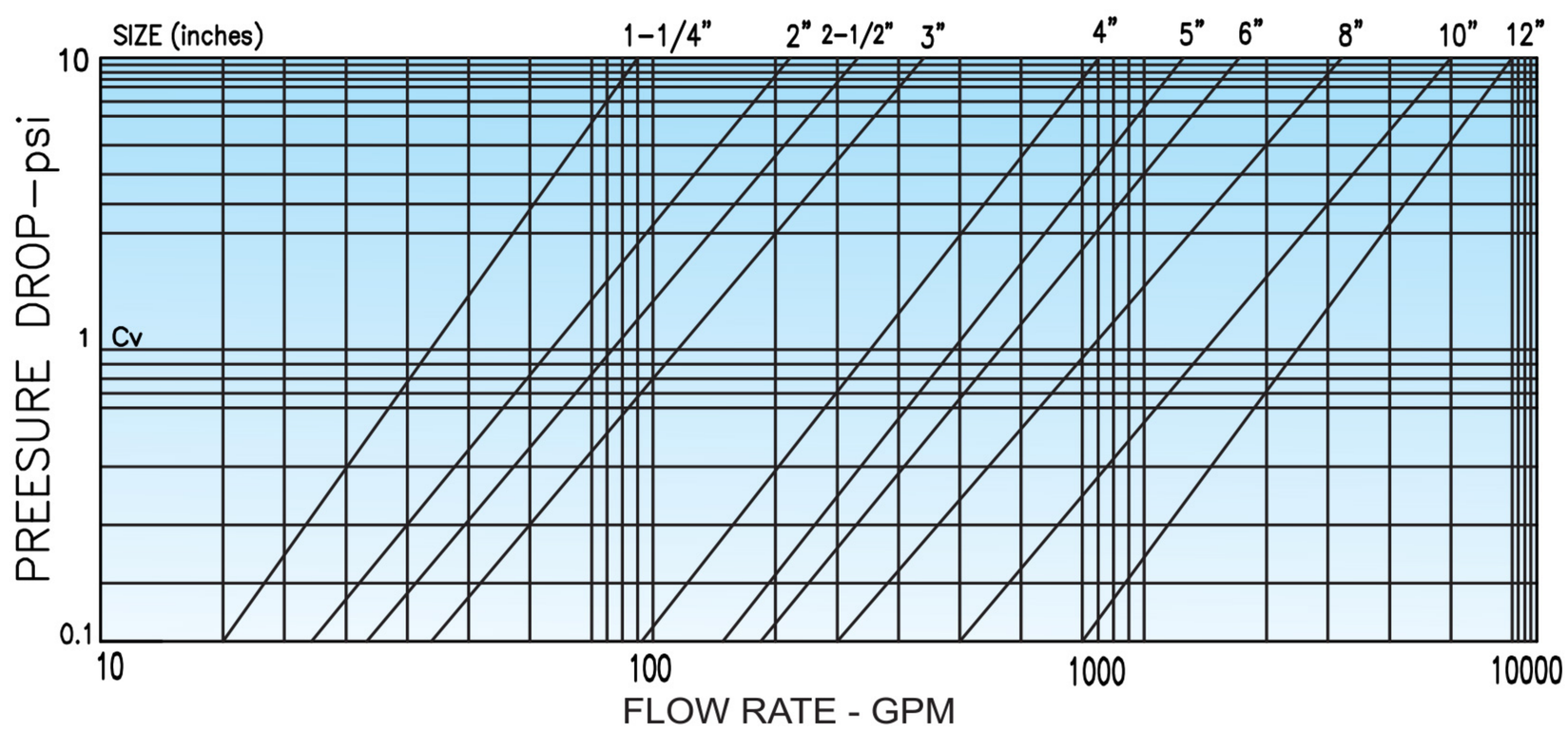

(PRESSURE DROP CURVE ARE BASED ON WATER FLOW WITH STANDARD SCREENS)

Note : The above data is subject to change without notice due to our continuing product improvement program.