DUCTILE IRON

REFLUX VALVE

INTRODUCTION

Leader Ductile Reflux Valves are designed with high sensitivity to pressure so that the valve closes immediately before significant fluid starts flowing backward. Fluid reversing backward causes damage to equipment like boilers or pumps. The valve is activated by the flowing material in the pipeline. The pressure of the fluid passing through the system opens the valve, while any reversal of flow will close the valve. Closure is accomplished by the weight of the check mechanism, by back pressure. Entirely automatic in action, depending upon differential pressure and velocity of flow within the line to perform their functions of opening and closing.

PRINCIPAL FEATURES

- Designed as per IS: 5312.
- Bolted Cover, Swing Disc design.
- Metal to Metal seating.
- Body castings made of superior Ductile Iron ASTM A395 grade to ensure additional strength.
- Gun Metal Body & Disc rings.
- Design Prohibits Galling or Scoring of Seating Surfaces.
- One-Piece Disc Construction Designed to Withstand Severe Service Conditions.
- Large Bolted-On Cover Provides Easy Access to Interior for Routine Maintenance.
- Rigid & Sturdy design.
- Long service life as wear is minimal which makes it highly reliable.
- Valve is mechanically automatic and thus it does not need an actuator or valve operator.
- A horizontal or vertical duct can be used, easy to install.
- The valve must be installed in the direction of the flow arrow.
- Flanged ends as per ASME B16.5 CL-150 (FF).
- Widely applied for low-pressure and ambient-temperature utility services such as water supply, power plants, irrigation projects, air conditioning systems as well as fire fighting systems to prevent the back flow.

END CONNECTION

Flanges as per ASME B16.5 CL-150 (FF), Drilled.
Flange drilling as per other standards also available upon request.

UTILISATION & SERVICE

"LEADER" Ductile Iron Reflux Valve are suitable for above-ground installations.
Best suited for potable water, treated fresh water, neutral liquids & some gases.

WORKING PRESSURE

Maximum Working Pressure: 20 Bar.
See Pressure / Temperature Diagram.

TEMPERATURE LIMITS

Maximum Working temperature: 220ºC.
See Pressure / Temperature Diagram.

Item Code:	DI021A
Pressure Rating:	PN-20
Testing Standard:	As per IS 5312
Size Range:	50mm to 300mm
Product Standard:	As per IS 5312

SUITABLE FOR

Water	Oil	Air	Gases	Steam
✓				

TEST PRESSURE (Hydrostatic)

Rating	PN-20
Body (Hyd.)	30 Bar
Seat (Hyd.)	22 Bar

PRESSURE/TEMPERATURE DIAGRAM

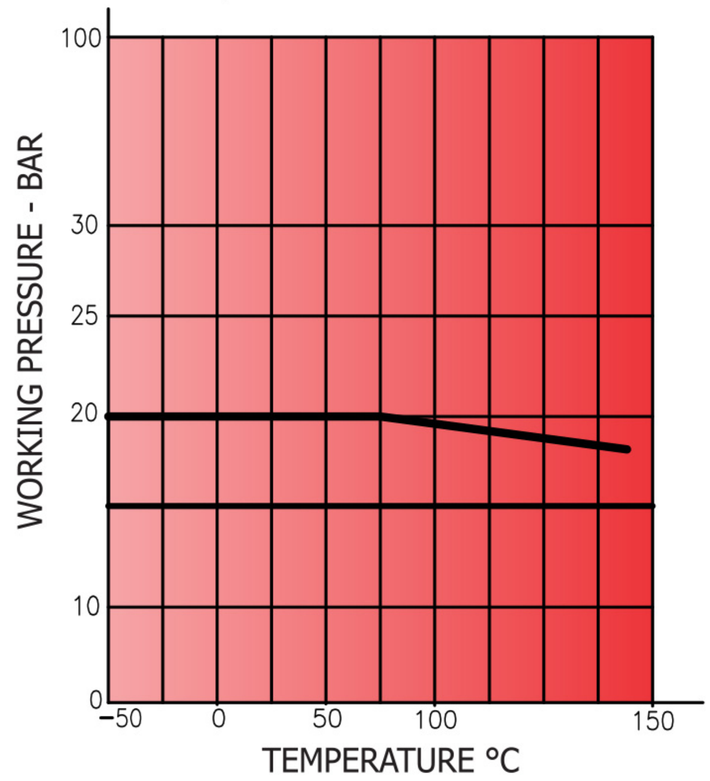

Note : The above data is subject to change without notice due to our continuing product improvement program.

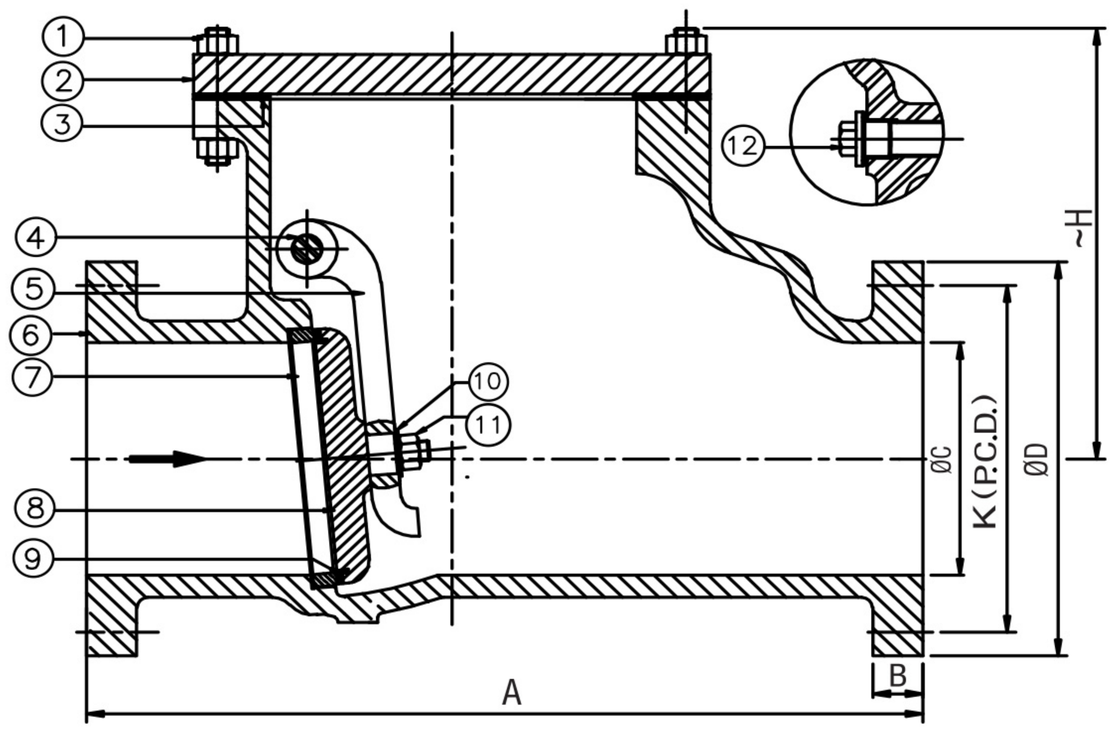

n = No. of holes
Ød = Dia. of holes

MATERIAL SPECIFICATION

P.No	NAME OF PART	MATERIAL	SPECIFICATION
1	STUDS & NUTS	CARBON STEEL	BS 916
2	COVER	DUCTILE IRON	ASTM A395
3	GASKET	RUBBER / C.N.A.F.	IS 638 TYPE B
4	HINGE PIN	H.T. BRASS	BS 2872 OR BS 2874 CZ114
5	HINGE	D.I. / C.C.S.	ASTM A395 / ASTM A216 Gr. WCB
6	BODY	DUCTILE IRON	ASTM A395
7	SEAT RING	GUN METAL	BSEN 1982 Gr. CC491K
8	DISC	DUCTILE IRON	ASTM A395
9	DISC RING	GUN METAL	BSEN 1982 Gr. CC491K
10	WASHER	BRASS / GUN METAL	BS 2872 OR BS 2874CZ114 / BSEN 1982 Gr. CC491K
11	NUT	H.T. BRASS	IS 6912 Gr.FHTB1
12	SIDE PLUG	STAINLESS STEEL	ASTM A276 TYPE 410

DIMENSIONAL DATA CLASS

SIZE (mm)	50	65	80	100	125	150	200	250	300
A	$203^{\pm2}$	$216^{\pm2}$	$241^{\pm2}$	$292^{\pm3}$	$350^{\pm2}$	$356^{\pm2}$	$495^{\pm2}$	$622^{\pm4}$	$698^{\pm4}$
B	16	16	21	22	23.8	23	24.5	26	27.5
ØC	50	65	80	100	125	150	200	250	300
~H	126	145	154	196	196	204	242	281	337
ØD	165	185	200	220	254	285	340	395	445
K	125	145	160	180	215.9	240	295	350	400
n	4	4	4	8	8	8	8	12	12
Ød	19	19	19	19	22.2	23	23	23	23