GUN METAL/BRONZE

HORIZONTAL LIFT CHECK VALVE

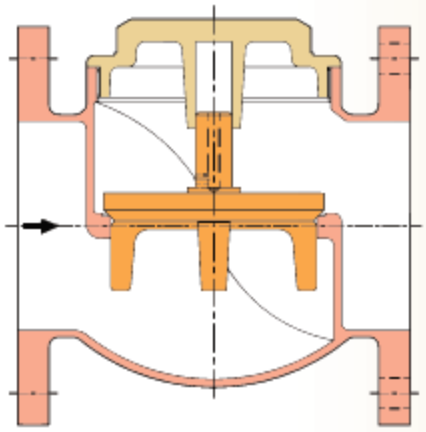

BODY	1
DISC	2
COVER	3

- **Item Code:** GM032
- **Pressure Rating:** CL-100
- **Testing Standard:** BSEN 12266 PART-1
- **Size Range:** 15mm to 100mm
- **Product Standard:** Mfg. Standard

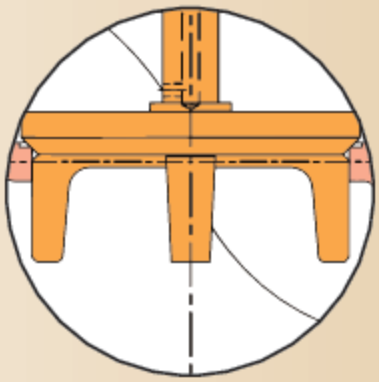

PRESSURE/TEMPERATURE DIAGRAM

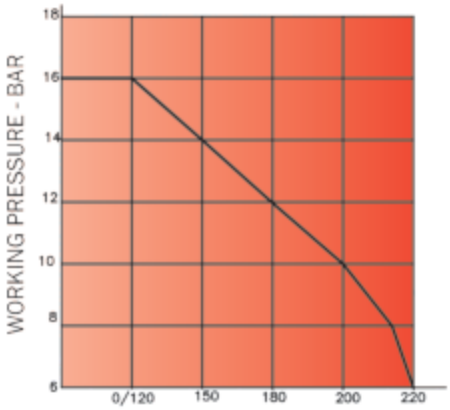

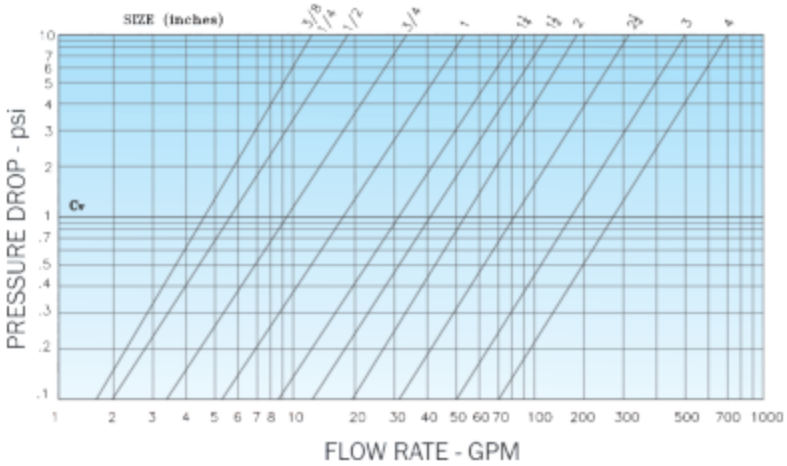

Note : The above data is subject to change without notice due to our continuing product improvement program.

PRINCIPAL FEATURES:

- Screwed in cover, integral seat.
- Gun Metal / Brass working parts, integral seat.
- Metal to metal seating.
- Disc is guided in body as well in cover to resist vibration induced by high flow velocity.
- Flanged ends as per BS:10 Table 'E'.
- Permit flow in one direction and closes automatically if the flow reverses.
- Suitable for only in horizontal installation.
- Also available with Rubber / PTFE Seating for Air and Gas applications at an extra cost.

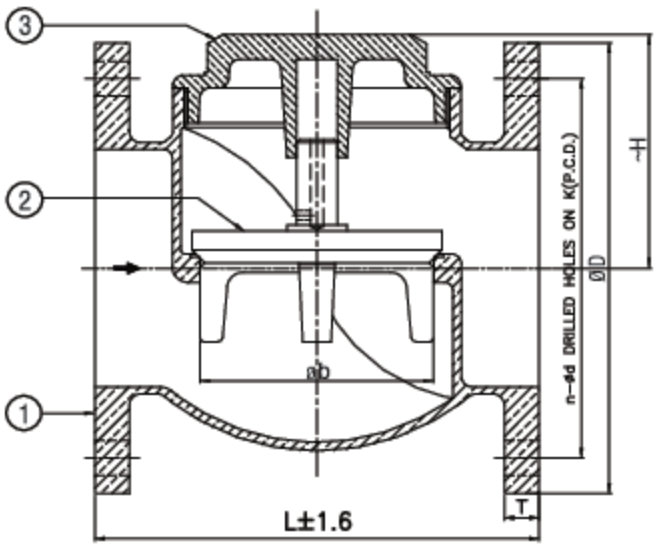

K = P.C.D.
n = No. of holes
Ød = Dia. of holes

END CONNECTION:

- Flanged ends as per BS:10 table 'E'.
- Flange drilling as per other standards also available upon request at an extra cost.

UTILISATION & SERVICE

- "LEADER" Gun Metal Horizontal Lift Check valves are suitable for above-ground installations.
- Best suited for hot & cold water, neutral liquids.

WORKING PRESSURE

- Maximum Working Pressure: 13.79 Bar.
- See Pressure / Temperature Diagram.

TEMPERATURE LIMITS:

- Maximum working temperature: 225°C.
- See Pressure / Temperature Diagram.

PRESSURE RATING: Class-100

TEST PRESSURE (Hydrostatic)	
BODY	SEAT
20.68 Bar (g)	15.17 Bar (g)

SUITABLE FOR

Water	Oil	Air	Gases
✓	✓		

DIMENSIONAL DATA

SIZE (mm)	15	20	25	32	40	50	65	80	100
~H	25	30	40	50	55	60	75	85	110
L	52	64	83	83	82	108	142	175	207
ØD	95.3	101.6	114.3	120.7	133.4	152.4	165.1	182.4	215.9
Øb	11	16	22.5	29	35	45	63.5	76.2	90
K	66.7	73	82.6	87.3	98.4	114.3	127	146.1	177.8
n	4	4	4	4	4	4	4	4	8
Ød	14.3	14.3	14.3	14.3	14.3	17.5	17.5	17.5	17.5
Item Code	GM 032	GM 032	GM 032	GM 032	GM 032	GM 032	GM 032	GM 032	GM 032

MATERIAL SPECIFICATION

P.No.	NAME OF PART	MATERIAL	SPECIFICATION
1	BODY	GUN METAL	BSEN 1982 Gr. CC491K
2	DISC	GUN METAL	BSEN 1982 Gr. CC491K
3	COVER	GUN METAL	BSEN 1982 Gr. CC491K

Note : The above data is subject to change without notice due to our continuing product improvement program.