FORGED BRASS

PRESSURE REDUCING VALVE

DIAPHRAGM TYPE WITH INBUILT STRAINER

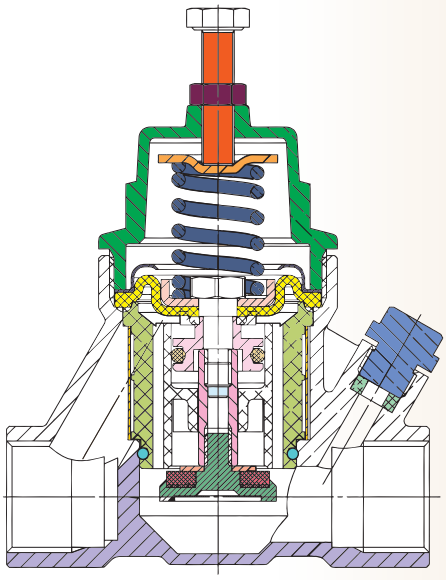

DISC FRAME	12	BODY	1
FILTER	13	LOCKING NUT	2
DIAPHRAGM PRESSING PLATE	14	LOCKING SEAL	3
DIAPHRAGM	15	LOCKING PLATE	4
DIAPHRAGM GASKET	16	'O' RING	5
SPRING	17	STEM	6
SPRING SEAT	18	FIXING SCREW BOLT	7
COVER	19	RUBBER GASKET	8
NUT	20	PLUG	9
HEXAGON HEAD BOLT	21	DISC	10
		'O' RING	11

- **Item Code:** FLB255
- **Pressure Rating:** PN-16
- **Testing Standard:** BSEN 12266 PART-1
- **Size Range:** 15mm to 50mm
- **Product Standard:** Mfg. Standard

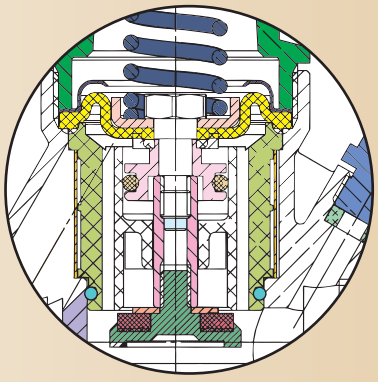

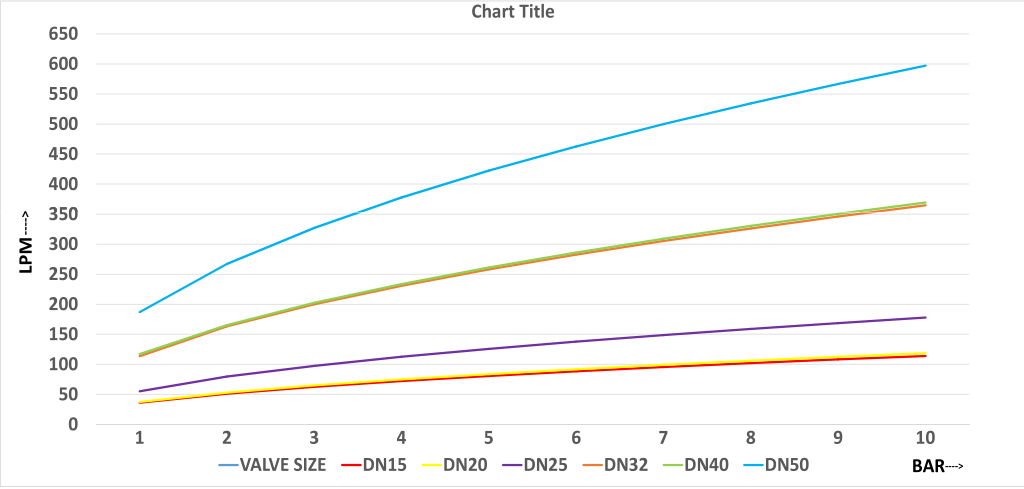

Note : The above data is subject to change without notice due to our continuing product improvement program.

LEADER VALVES LIMITED

PRINCIPAL FEATURES

- Diaphragm technology is better in high traffic, poor water conditions and high back pressure.
- Equilibrated Diaphragm seat ensures stable outlet pressure even with sudden and varying inlet pressure changes.
- Maximum Flow rate with Minimum Fluctuation in reduced pressure.
- Stainless steel spring is not in contact with the potable water, hence the spring remains corrosion free.
- In-built strainer prevents dirt particles from reaching internals of the valve to avoid valve failures.
- Reinforced Canvas Rubber Diaphragm gives strength and longer life.
- Internal moving parts are made of high quality plastic with SS304 insert for longer smoother life and also prevents water hammer.
- 'Cartridge' design internals - entire working mechanism is in a cartridge which operates independent of the body. Thus servicing is without removing body from pipe work.
- Valve is provided with provision for inserting pressure gauge on the outlet side.
- The outlet pressure can be adjusted by turning the adjustment nut.

END CONNECTION

- Screwed Female BSP Parallel Threads.

UTILISATION & SERVICE

- "LEADER" Brass Pressure Reducing Valves are suitable for above-ground installations.
- Best suited for potable water & treated fresh water.

WORKING PRESSURE

- Maximum Inlet Pressure: 16 Bar.
- Outlet Pressure Range: 1.5 to 4.5 Bar (Max.).

TEMPERATURE LIMITS

- Maximum working temperature: 65°C.

PRESSURE RATING: PN-16

TEST PRESSURE (Hydrostatic)
BODY
24 Bar

SUITABLE FOR

Water	Oil	Air	Gases
✓			

DIMENSIONAL DATA

SIZE (mm)	15	20	25	32	40	50
L	78	78	94	125	125	145
T	12	12	14	16	16	19.5
G	1/2"	3/4"	1"	1-1/4"	1-1/2"	2"
~H	90.1	90.1	119	137	138.2	157.2

MATERIAL SPECIFICATION

P.No.	NAME OF PART	MATERIAL
1	BODY	FORGED BRASS (DIN EN 12165 Gr. CW617N)
2	LOCKING NUT	FORGED BRASS (DIN EN 12165 Gr. CW617N)
3	LOCKING SEAL	NITRILE RUBBER
4	LOCKING PLATE	S.S. 304
5	'O' RING	NITRILE RUBBER
6	STEM	S.S. 304
7	FIXING SCREW BOLT	FORGED BRASS (DIN EN 12165 Gr. CW617N)
8	'RUBBER GASKET	NITRILE RUBBER
9	PLUG	FORGED BRASS (DIN EN 12165 Gr. CW617N)
10	DISC	FORGED BRASS (DIN EN 12165 Gr. CW617N)
11	'O' RING	NITRILE RUBBER
12	DISC FRAME	PLASTIC
13	FILTER	S.S. 304
14	DIAPHRAGM PRESSING PLATE	S.S. 301
15	DIAPHRAGM	NITRILE RUBBER
16	DIAPHRAGM GASKET	S.S. 301
17	SPRING	S.S. 304
18	SPRING SEAT	S.S. 301
19	COVER	FORGED BRASS (DIN EN 12165 Gr. CW617N)
20	NUT	S.S. 301
21	HEXAGON HEAD BOLT	S.S. 301

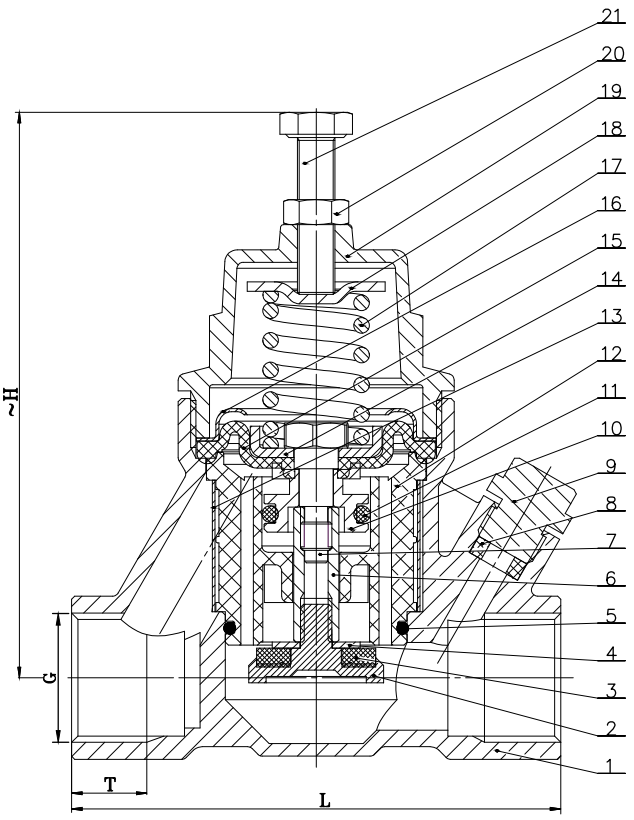

Note : The above data is subject to change without notice due to our continuing product improvement program.