BRASS

FERRULE COCK

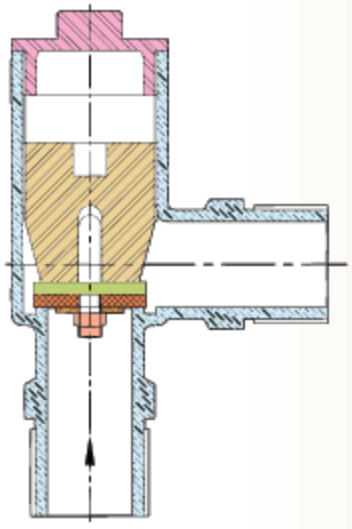

NUT	1
WASHER	2
SEAT	3
WASHER PLATE	4
PLUG	5
BODY	6
CAP	7

- **Item Code:** GM0289
- **Pressure Rating:** PN-16
- **Testing Standard:** IS 2692
- **Size Range:** 15mm
- **Product Standard:** IS 2692

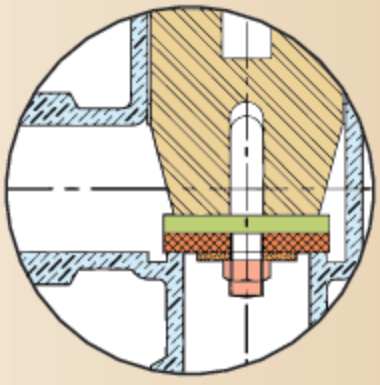

PRESSURE/TEMPERATURE DAIGRAM

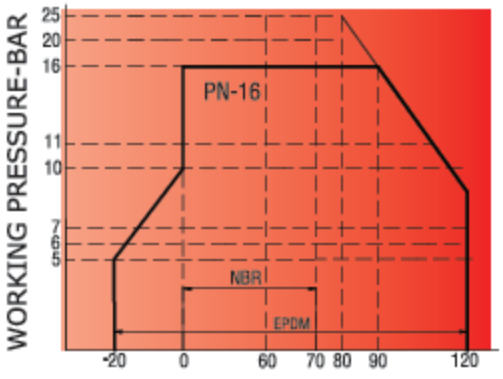

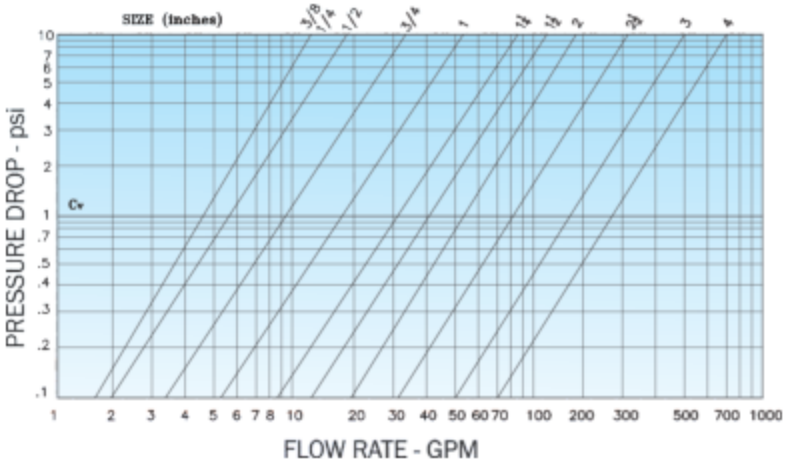

Note : The above data is subject to change without notice due to our continuing product improvement program.

PRINCIPAL FEATURES:

- Design Std. IS 2692.
- Designed for high pressure.
- Resilient Rubber Disc.
- Screwed Male Taper threads to BS21 / IS:554.
- Best suitable for underground installation.

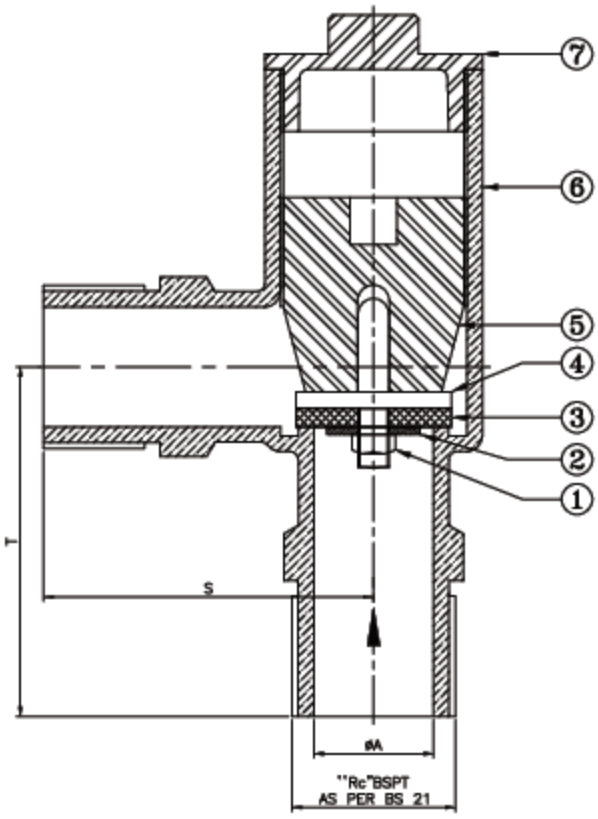

END CONNECTION:

- Screwed Male BSP Taper threads to BS21 / IS:554.

UTILISATION & SERVICE

- "LEADER" Brass Ferrule Cocks are suitable for both above-ground & underground installations.
- Best suited for potable water, treated fresh water.

WORKING PRESSURE

- Maximum Working Pressure: 16 Bar.
- See Pressure / Temperature Diagram.

TEMPERATURE LIMITS:

- Maximum working temperature: 100°C .
- See Pressure / Temperature Diagram.

PRESSURE RATING: PN-16

TEST PRESSURE (Hydrostatic)	
BODY	SEAT
24 Bar (g)	17.6 Bar (g)

SUITABLE FOR

Water	Oil	Air	Gases
✓			

DIMENSIONAL DATA

SIZE (mm)	15
T	60
S	55
ØA	12.3
BSPT TAPER	1/2"
Item Code	GM 0289

MATERIAL SPECIFICATION

P.No.	NAME OF PART	MATERIAL	SPECIFICATION
1	NUT	BRASS	IS 319
2	WASHER	BRASS	IS 319
3	WASHER	RUBBER	
4	WASHER PLATE	BRASS	IS 319
5	PLUG	BRASS	BRASS (EN1982 Gr. CC754S)
6	BODY	BRASS	BRASS (EN1982 Gr. CC754S)
7	CAP	BRASS	BRASS (EN1982 Gr. CC754S)

Note : The above data is subject to change without notice due to our continuing product improvement program.