GUN METAL/BRONZE

BIB COCK

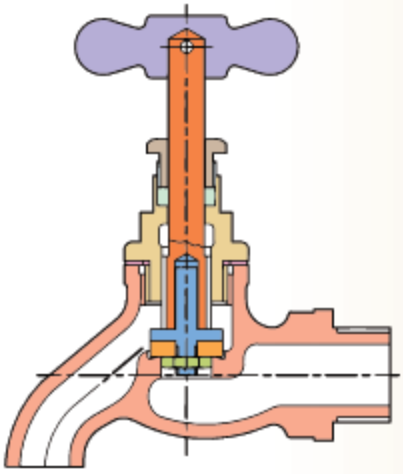

BODY	1
NUT	2
DISC	3
DISC HOLDER	4
GASKET	5
BONNET	6
PACKING	7
GLAND	8
STEM	9
HANDLE	10

- **Item Code:** GM059
- **Pressure Rating:** PN-10
- **Testing Standard:** BSEN 12266 PART-1
- **Size Range:** 15mm to 25mm
- **Product Standard:** Mfg. Standard

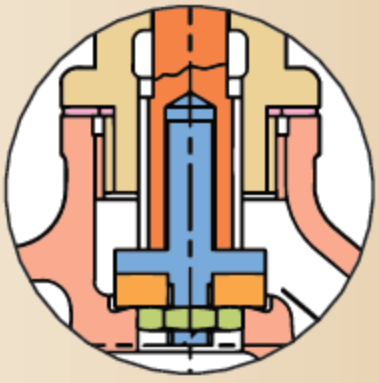

PRESSURE/TEMPERATURE DAIGRAM

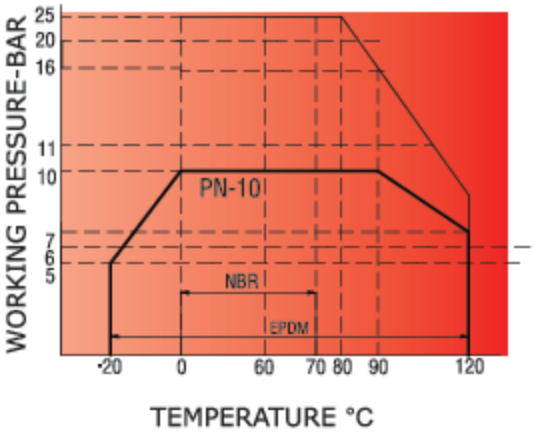

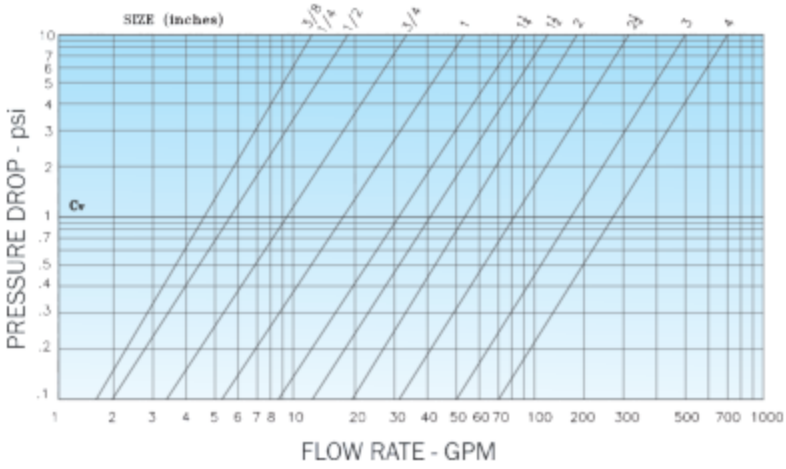

Note : The above data is subject to change without notice due to our continuing product improvement program.

PRINCIPAL FEATURES:

- Crutch Head polished body.
- Resilient Rubber Disc.
- Water resistant, leak proof & durable.
- Screwed Male BSP parallel threads to BS21 / IS:554.

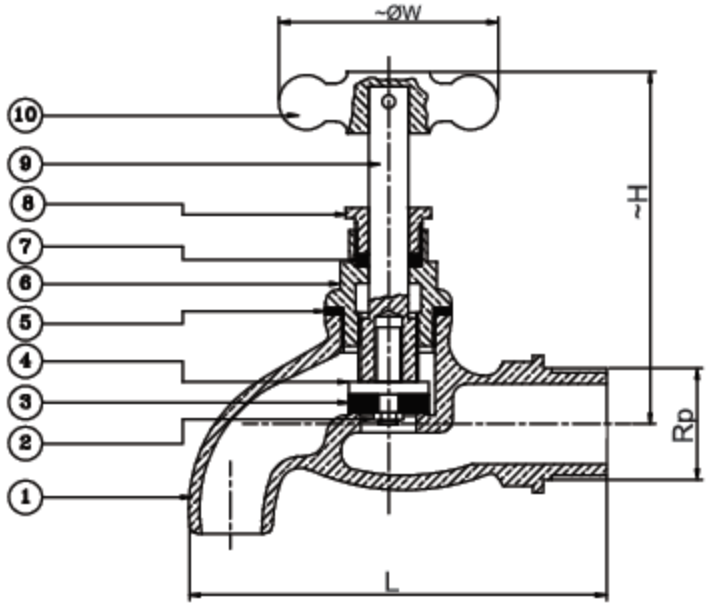

END CONNECTION:

- Screwed Male BSP parallel threads to BS21 / IS:554.

UTILISATION & SERVICE

- "LEADER" Brass Bib Cocks are suitable for both above-ground & underground installations.
- Best suited for potable water, treated fresh water.

WORKING PRESSURE

- Maximum Working Pressure: 10 Bar.
- See Pressure / Temperature Diagram.

TEMPERATURE LIMITS:

- Maximum working temperature: 100°C.
- See Pressure / Temperature Diagram.

PRESSURE RATING: PN-10

TEST PRESSURE (Hydrostatic)	
BODY	SEAT
16 Bar (g)	11 Bar (g)

SUITABLE FOR

Water	Oil	Air	Gases
✓			

DIMENSIONAL DATA

SIZE (mm)	15	20	25
L	69	81	91
~H	65.5	67	82
~ØW	42.5	48.5	57
Rp	½"	3/4"	1"
Item Code	GM 059	GM 059	GM 059

MATERIAL SPECIFICATION

P.No.	NAME OF PART	MATERIAL	SPECIFICATION
1	BODY	BRASS / GUN METAL	BSEN 1982 CC754S / BSEN 1982 Gr.CC491K
2	NUT	BRASS ROD	BS 2872 OR 2874 CZ114
3	DISC	VULCANISED SYNTHETIC or NATURAL RUBBER	BS 3475
4	DISC HOLDER	BRASS ROD	BS 2872 OR BS 2874 CZ114
5	GASKET	SYN. RUBBER	BS 2751 BA-70
6	BONNET	BRASS / GUN METAL	BSEN 1982 CC754S / BSEN 1982 Gr.CC491K
7	PACKING	ASBESTOS	_____
8	GLAND	BRASS ROD	BS 2872 OR BS 2874 CZ114
9	STEM	BRASS ROD	BS 2872 OR BS 2874 CZ114
10	HANDLE	BRASS ROD	BS 2872 OR BS 2874 CZ114

Note : The above data is subject to change without notice due to our continuing product improvement program.