FORGED BRASS PRESSURE REDUCING VALVE

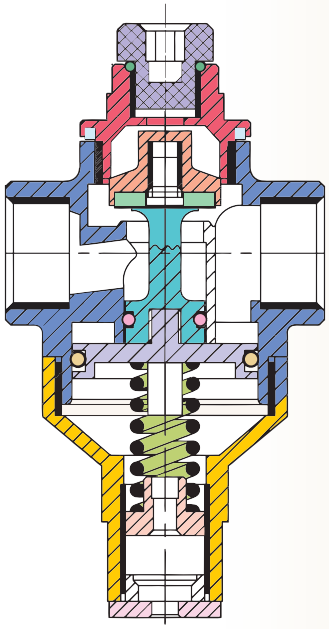

SPRING	12	PLUG COVER	1
BASE	13	GASKET	2
SPRING SEAT	14	BONNET	3
PISTON	15	CORE	4
		STEM	5
		'O'-RING	6
		GASKET	7
		SEAL	8
		BODY	9
		COVER	10
		'O'-RING	11

- **Item Code:** FLB0123
- **Pressure Rating:** PN-25
- **Testing Standard:** BS 6755 PART-1
- **Size Range:** 15mm to 50mm
- **Product Standard:** Mfg. Standard

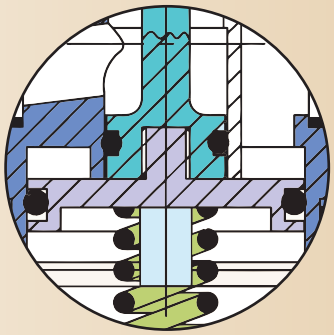

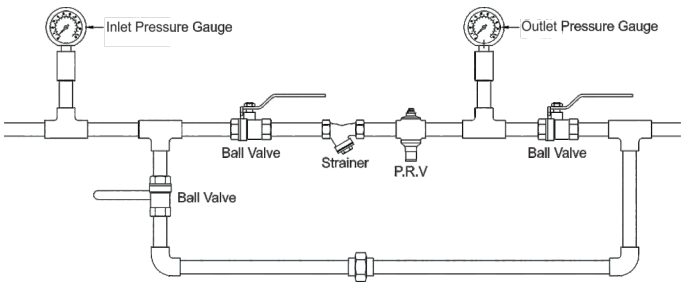

LAYOUT DIAGRAM

DISCHARGE DATA

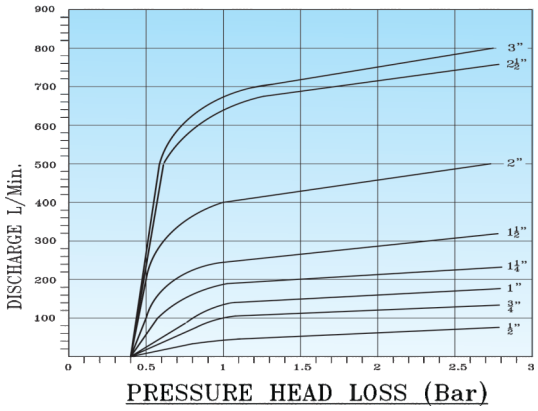

The chart shows the curve at 8 Bar inlet pressure and 3 Bar set pressure. Curves for other settings are similar, the curve shifts slightly to the left for the smaller differential & to the right for a greater differential.

Note : The above data is subject to change without notice due to our continuing product improvement program.

LEADER VALVES LIMITED

PRINCIPAL FEATURES

- Screwed Female Ends to BS:21 / IS : 554.
- Spring Loaded Piston Type design provided with high quality Nitrile Rubber "O" ring to have less maintenance cost.
- Provision for pressure gauge is provided.
- Designed to suite precise application requiring accurate pressure rating (pressure drop being less).
- Most ideal for Sensitive & a consistent fluid regulation.
- No external source of energy required.
- Very rugged type of construction leads to low damages and self operating in nature.
- Can be installed in 360 Deg. Rotational Axis.
- Compact Size, easy to install.
- Facility provided to install a pressure gauge of ¼" BSP size to gauge the critically relevant outlet pressure.
- All 'O' rings are of superior food grade material, hence ensuring absolute zero health hazard.

END CONNECTION

- Screwed Female BSP Parallel Threads.

UTILISATION & SERVICE

- "LEADER" Brass Pressure Reducing Valves are suitable for above-ground installations.
- Best suited for potable water & treated fresh water.

WORKING PRESSURE

- Maximum Inlet Pressure: 27 Bar.

TEMPERATURE LIMITS

- Maximum working temperature: 100°C.

PRESSURE RATING: PN-25

- Body Test Pressure : 37.5 Bar Hyd.
- Maximum Inlet Pressure : 27 Bar.
- Outlet Pressure Range : 0.5 to 6 Bar.

SUITABLE FOR

Water	Oil	Air	Gases
✓			

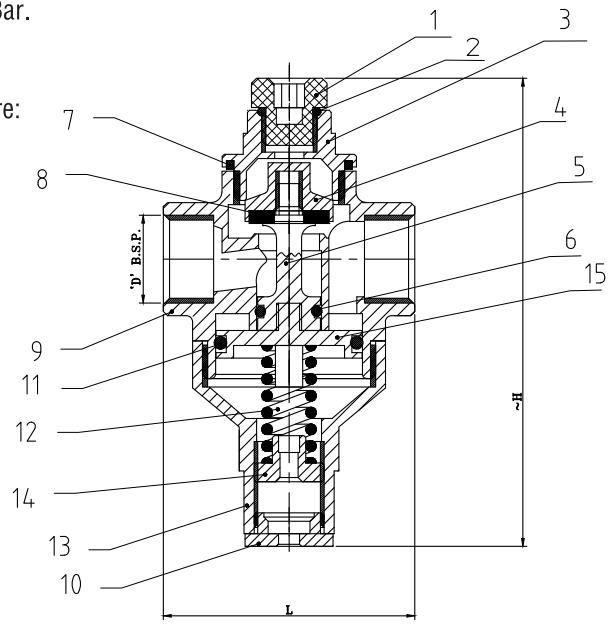

DIMENSIONAL DATA

SIZE (mm)	15	20	25	32	40	50
L	60	60	86.5	91	91	91
~H	111.5	114.5	154	159	165	178
'D'	1/2"	3/4"	1"	1-1/4"	1-1/2"	2"
Item Code	FLB123	FLB123	FLB123	FLB123	FLB123	FLB123

MATERIAL SPECIFICATION

P.No.	NAME OF PART	MATERIAL	SPECIFICATION
1	PLUG COVER	ABS	–
2	GASKET	NBR	–
3	BONNET	FORGED BRASS	IS 6912 Gr. FLB
4	CORE	FORGED BRASS	IS 6912 Gr. FLB
5	STEM	FORGED BRASS	IS 6912 Gr. FLB
6	'O'RING	NBR	IS 6912 Gr. FLB
7	GASKET	NBR	–
8	SEAL	NBR	–
9	BODY	FORGED BRASS	IS 6912 Gr. FLB
10	COVER	ABS	–
11	'O'RING	NBR	–
12	SPRING	CARBON STEEL	–
13	BASE	FORGED BRASS	IS 6912 Gr. FLB
14	SPRING SEAT	FORGED BRASS	IS 6912 Gr. FLB
15	PISTON	FORGED BRASS	IS 6912 Gr. FLB

Note : The above data is subject to change without notice due to our continuing product improvement program.