GUN METAL/BRONZE

Y-TYPE STRAINER

BODY 1
SCREEN 2
WASHER 3
PLUG 4

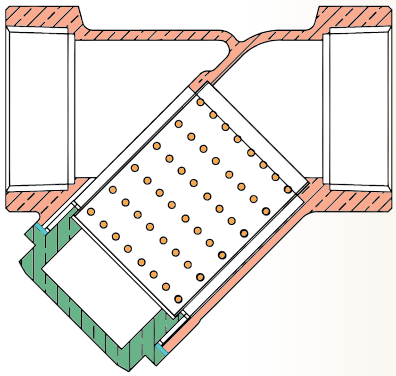

- **Item Code:** GM0230
- **Pressure Rating:** PN-16
- **Testing Standard:** BSEN 12266 PART-1
- **Size Range:** 15mm to 50mm
- **Product Standard:** Mfg. Standard

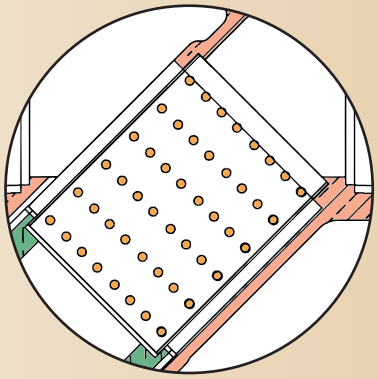

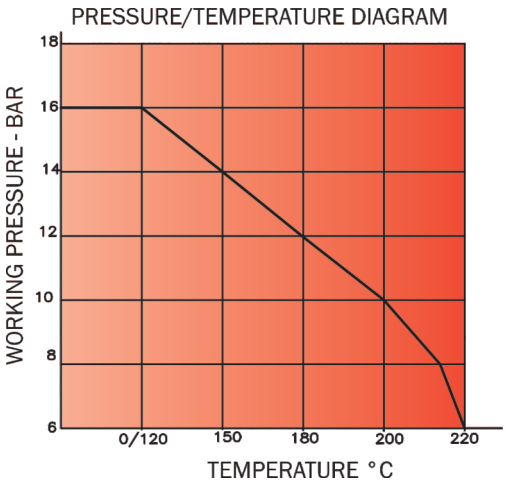

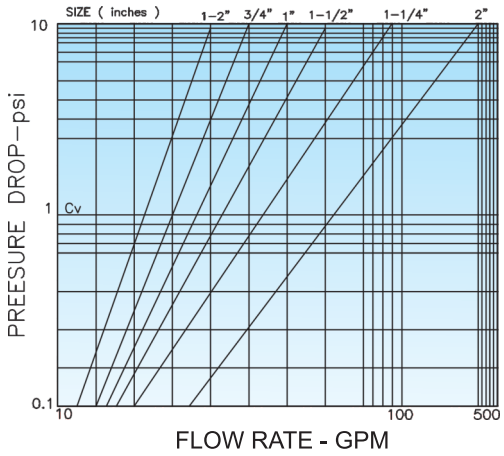

(PRESSURE DROP CURVES ARE BASED ON WATER FLOW WITH STANDARD SCREENS.)

Note : The above data is subject to change without notice due to our continuing product improvement program.

PRINCIPAL FEATURES

- Screwed female end as per IS 554 / BS 21.
- Stainless steel (SS304) Screen Having 1mm dia perforation.
- Large screen area makes the strainer efficient with low pressure drops.
- Y-Strainers can be installed in both Horizontal and Vertical orientation which makes the installation more versatile and easier.
- As Y-Strainer is compact it is comparatively cheaper.
- Y-Strainers can withstand more pressure than other types of strainers.

END CONNECTION

- Screwed Female BSP Parallel Threads.

UTILISATION & SERVICE

"LEADER" Gun Metal / Bronze Y Strainer are suitable for Water service.

WORKING PRESSURE

- Maximum Working Pressure: 16 Bar.
- See Pressure / Temperature Diagram.

TEMPERATURE LIMITS

- Maximum working temperature: 225 ºC.
- See Pressure / Temperature Diagram.

PRESSURE RATING: PN-16

TEST PRESSURE (Hydrostatic)
BODY
24 Bar

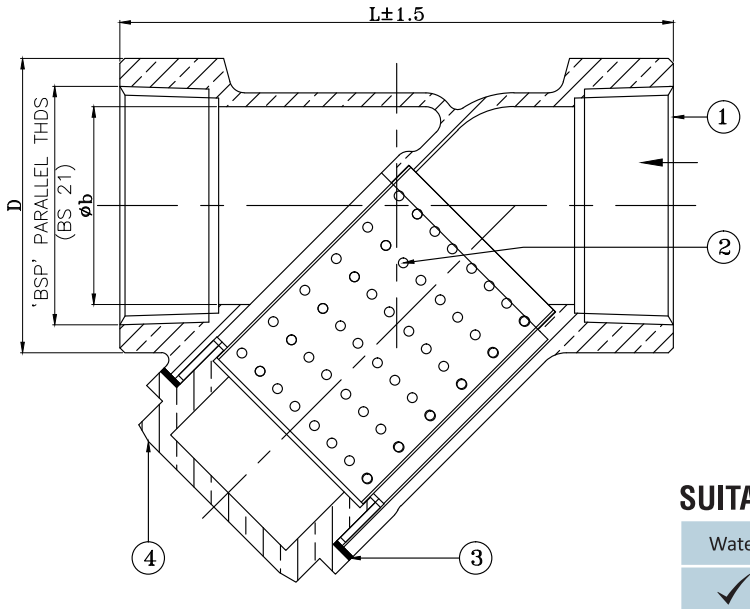

SUITABLE FOR

Water	Oil	Air	Gases
✓			

DIMENSIONAL DATA

SIZE (mm)		15	20	25	32	40	50
L		57	69	80	103	112	130
D	OCT.C/C	27	33.6	41.7	53	59.5	73.6
	OCT.F/F	25	31	38.5	48.9	55	68
BSP		1/2"	3/4"	1"	1-1/4"	1-1/2"	2"
Øb		14	18	23	32	40	46
Item Code		GM 0230	GM 0230	GM 0230	GM 0230	GM 0230	GM 0230

MATERIAL SPECIFICATION

P.No.	NAME OF PART	MATERIAL	SPECIFICATION
1	BODY	GUN METAL	BSEN 1982 Gr. CC491K
2	SCREEN	STAINLESS STEEL	(TYPE 304) Ø1mm PERFORATION
3	WASHER	CNAF	-----
4	PLUG	GUN METAL	BSEN 1982 Gr. CC491K

Note : The above data is subject to change without notice due to our continuing product improvement program.