FORGED BRASS

FULL BORE BALL VALVE

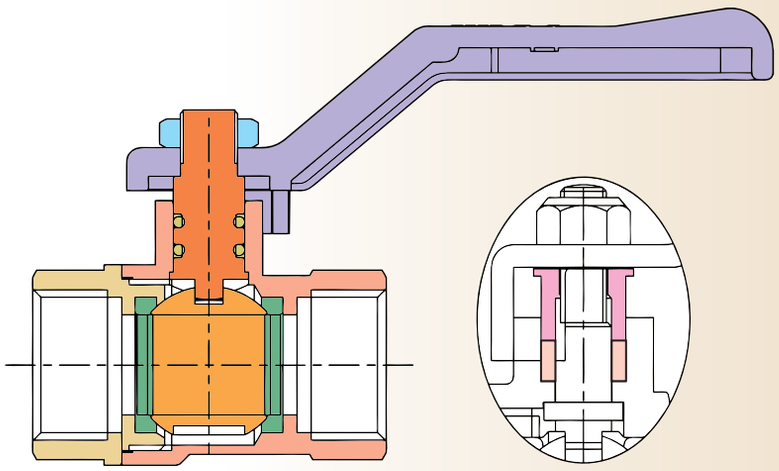

BODY	1
BALL	2
SEAT	3
END CONNECTOR	4
STEM	5
'O' RING	6
NUT	7
LEVER	8
PACKING	9
GLAND NUT	10

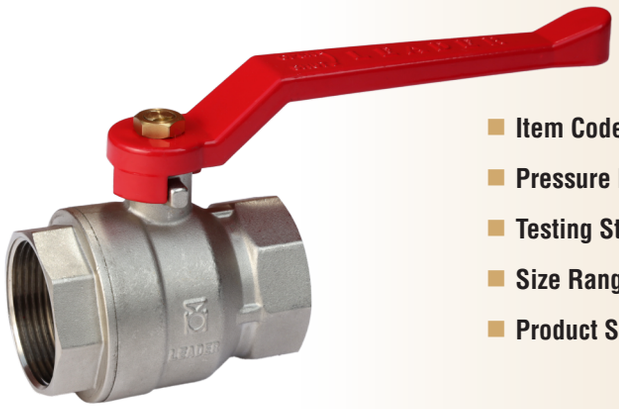

- **Item Code:** GM200
- **Pressure Rating:** PN-25
- **Testing Standard:** BSEN 12266 Part-1
- **Size Range:** 8mm to 100mm
- **Product Standard:** Mfg. Standard

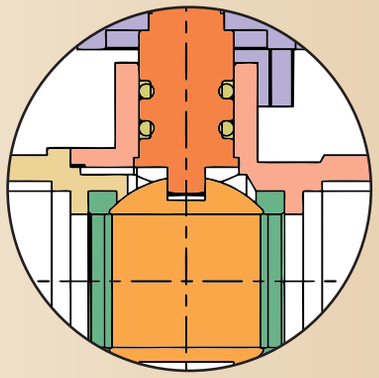

PRESSURE/TEMPERATURE DIAGRAM
(TESTED WITH WATER)

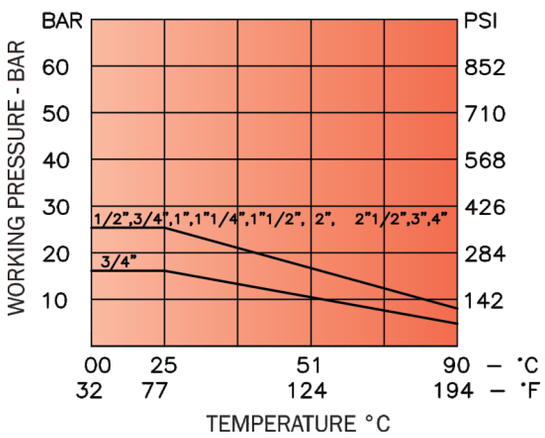

HEAD LOSS DIAGRAM
(TESTED WITH AIR)

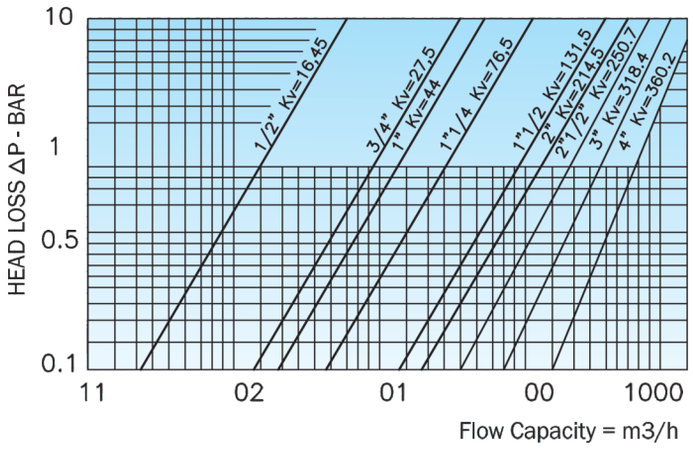

Note : The above data is subject to change without notice due to our continuing product improvement program.

PRINCIPAL FEATURES

- Screwed Female Ends to BS:21 / IS : 554.
- Full bore, Two Piece Design.
- Quarter Turn, lever operated with Low torque & stipulated leverage.
- Provided with forged brass hard chrome plated ball.
- Anti blow-out stem design feature which gives further assurance against the accidental blow-out of the stem.
- Premium quality PTFE seating.
- Nickel plated finish body & connector.
- Extra strength of stem with high tensile brass.
- Gland less design, stem sealing by double seal O ring ensures zero leakage from the stem.
- Replaceable & virgin oil free PTFE Rings for smooth operation.
- Anti corrosive SS / Brass Stem Nut provided for trouble free operation of the Lever.
- Aluminium Lever avoids rusting of the lever in corrosive environment.
- Position indication of open / close embossed on the lever.

END CONNECTION

- Screwed Female BSP Parallel Threads.

UTILISATION & SERVICE

- "LEADER" Forged Brass Ball Valve are suitable for treated fresh water & air.

WORKING PRESSURE

- Maximum Working Pressure: 20 Bar.
- See Pressure / Temperature Diagram.

TEMPERATURE LIMITS

- Maximum working temperature: 100°C.
- See Pressure / Temperature Diagram.

PRESSURE RATING: PN-25

TEST PRESSURE (Hydrostatic)

BODY	SEAT
30 Bar	22 Bar

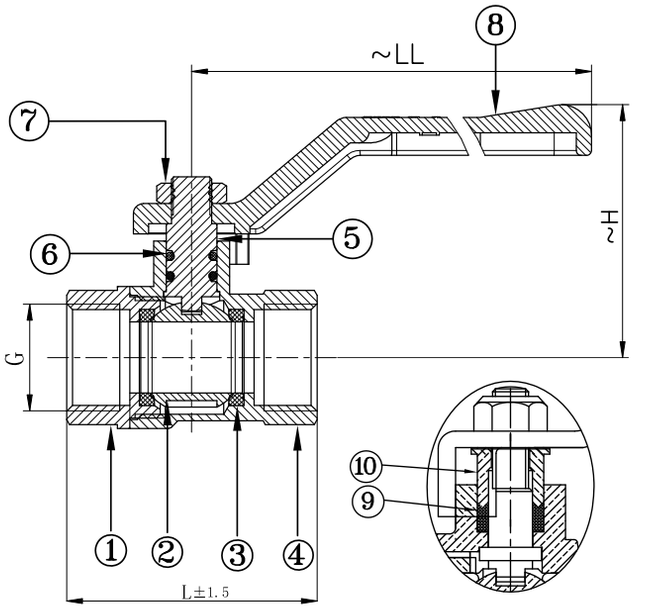

DESIGN FOR SIZES 8mm, 10mm & 65mm & ABOVE

SUITABLE FOR

Water	Oil	Air	Gases
✓		✓	

DIMENSIONAL DATA

SIZE (mm)	8	10	15	20	25	32	40	50	65	80	100
L	37	40.3	52	56.4	70.1	77	85	103	121.5	137	164.5
~H	44	44	49.9	53.4	61.3	74.8	81.5	102.7	119	135	150
~LL	83.5	83.5	120	133.5	133.5	160	160	200	220	275	275
G	1/4"	3/8"	1/2"	3/4"	1"	1-1/4"	1-1/2"	2"	2-1/2"	3"	4"
Item Code	GM200	GM200	GM200	GM200	GM200	GM200	GM200	GM200	GM200	GM 200	GM 200

MATERIAL SPECIFICATION

P.No.	NAME OF PART	MATERIAL	SPECIFICATION
1	BODY	NI-PLATED FORGED BRASS	DIN EN 12156 CW 617N
2	BALL	BRASS CHROME PLATED	DIN EN 12156 CW 617N
3	SEAT	PTFE	—
4	END CONNECTOR	NI-PLATED FORGED BRASS	DIN EN 12156 CW 617N
5	STEM	HIGH TENSILE BRASS	IS 6912 Gr. FHTB1
6	'O' RING	RUBBER	—
7	NUT	H.T. BRASS / STAINLESS STEEL	—
8	LEVER	ALUMINIUM / MS PVC INSULATED (POWDER COATED)	
9	PACKING	PTFE	—
10	GLAND NUT	BRASS / STAINLESS STEEL	—

Note : The above data is subject to change without notice due to our continuing product improvement program.