GUN METAL/BRONZE

IS778
CM/L-0485757

GATE VALVE

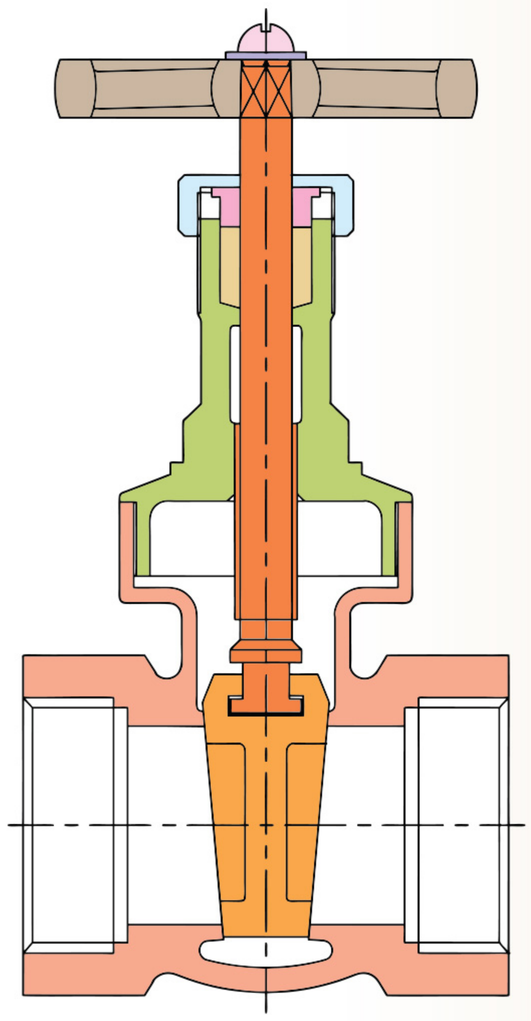

BODY	1
WEDGE	2
STEM	3
BONNET	4
PACKING	5
GLAND	6
GLAND NUT	7
HAND WHEEL	8
WASHER	9
SCREW	10

- **Item Code:** IS 002 & IS 008
- **Pressure Rating:** CL-1 & CL-2
- **Testing Standard:** IS 6157
- **Size Range:** 8mm to 100mm
- **Product Standard:** IS 778

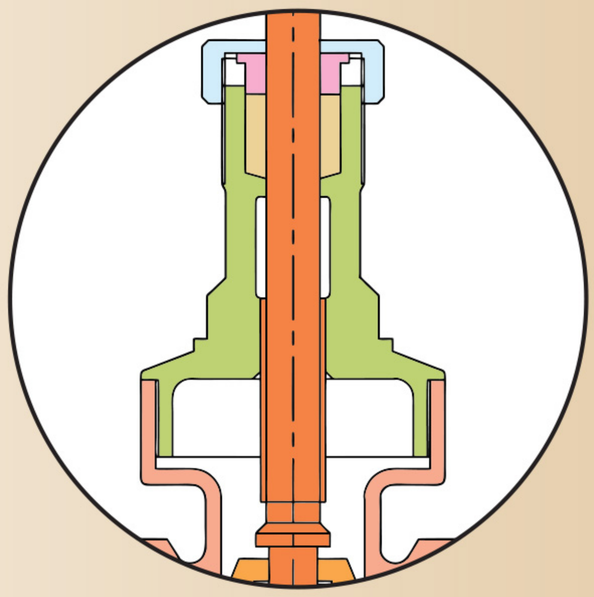

PRESSURE/TEMPERATURE DIAGRAM

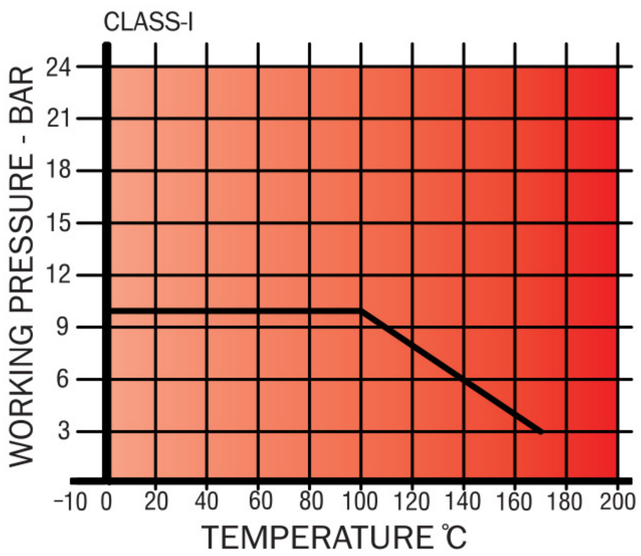

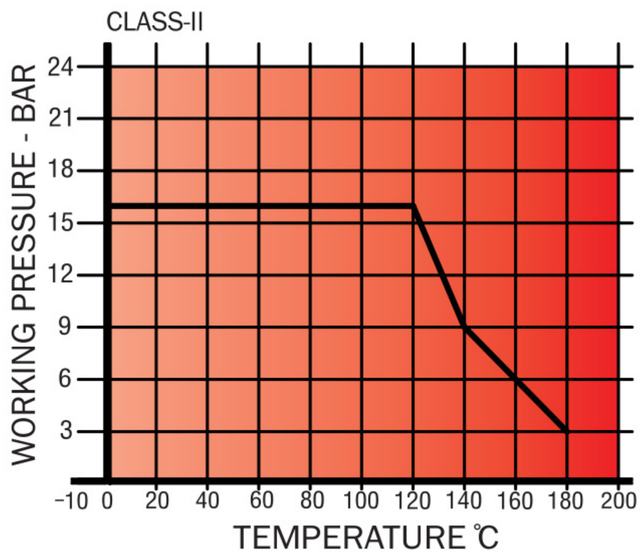

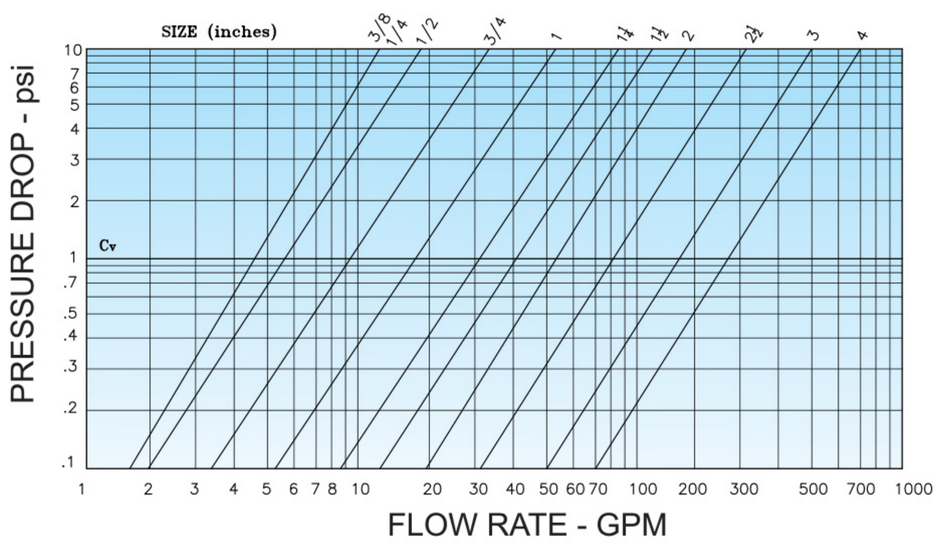

Note : The above data is subject to change without notice due to our continuing product improvement program.

PRINCIPAL FEATURES

- Design Std.: IS:778.
- Screwed in bonnet, inside screw rising stem, integral seat.
- Screwed female parallel threads to IS: 554.
- Heavy duty full bore long threads.
- Extra strength of stem with high tensile brass.
- Provision for repacking under pressure in the installed condition.
- Sheet metal handwheel offers better strength & convenient operation.
- Easy visual control of open / closed position marked on the handwheel / name plate.
- Available with open-shut indicator & locking arrangement on request.

END CONNECTION

- Screwed Female threads IS:554 (Parallel).

UTILISATION & SERVICE

- "LEADER" Gun Metal Gate valves are suitable for above-ground installations.
- Best suited for potable water, treated fresh water, neutral liquids & some gases.

WORKING PRESSURE

- Maximum Working Pressure: (Class-I) 10 Bar, (Class-II) 16 Bar.
- See Pressure / Temperature Diagram.

TEMPERATURE LIMITS

- Maximum working temperature: 45°C.
- See Pressure / Temperature Diagram.

PRESSURE RATING: CL-1 & CL-2

TEST PRESSURE (Hydrostatic)	
CLASS - 1	
BODY	SEAT
1.5 Mpa (217.5 psig)	1.0 Mpa (145 psig)

TEST PRESSURE (Hydrostatic)	
CLASS - 2	
BODY	SEAT
2.4 Mpa (348 psig)	1.6 Mpa (232 psig)

SUITABLE FOR

Water	Oil	Air	Gases
✓		✓	✓

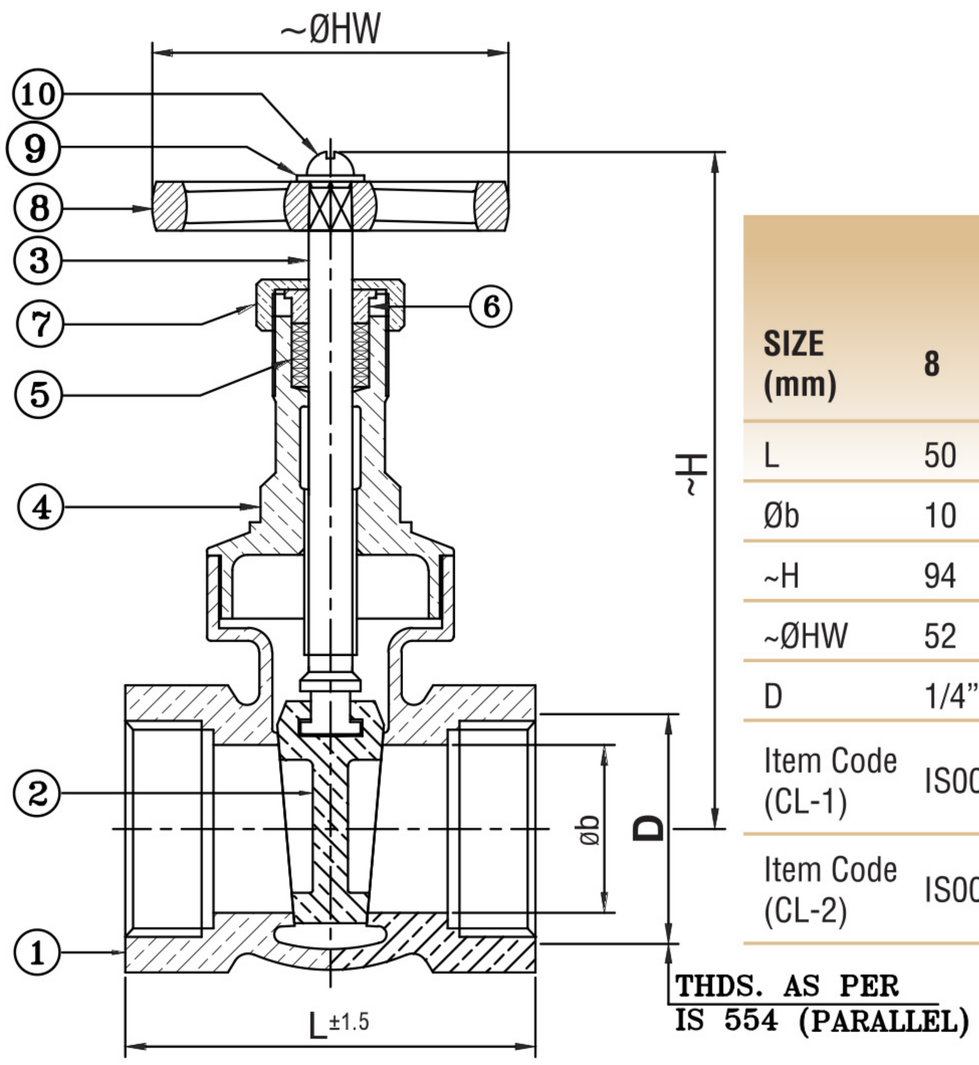

DIMENSION TABLE

SIZE (mm)	8	10	15	20	25	32	40	50	65	80	100
L	50	50	60	60	70	80	90	100	105	125	160
Øb	10	10	15	20	25	32	40	50	65	80	100
~H	94	95	110	129	152	160	196	232	285	330	405
~ØHW	52	52	60	60	70	90	92	103	130	153	165
D	1/4"	3/8"	1/2"	3/4"	1"	1-1/4"	1/1-2"	2"	2-1/2"	3"	4"
Item Code (CL-1)	IS002	IS002	IS002	IS002	IS002	IS002	IS002	IS002	IS002	IS002	IS002
Item Code (CL-2)	IS008	IS008	IS008	IS008	IS008	IS008	IS008	IS008	IS008	IS008	IS008

MATERIAL SPECIFICATION

P.No.	NAME OF PART	MATERIAL	SPECIFICATION
1	BODY	LEADED TIN BRONZE	IS 318 Gr. LTB2
2	WEDGE	LEADED TIN BRONZE / FORGED BRASS	IS 318 Gr. LTB2 / IS 6912 Gr. FLB
3	STEM	HIGH TENSILE BRASS	IS 6912 Gr. FHTB1
4	BONNET	LEADED TIN BRONZE / FORGED BRASS	IS 318 Gr. LTB2 / IS 6912 Gr. FLB
5	PACKING	HEMP & JUTE	IS 5414
6	GLAND	LEADED TIN BRONZE / BRASS ROD	IS 318 Gr. LTB2 / IS 6912 Gr. FHTB1
7	GLAND NUT	LEADED TIN BRONZE / BRASS ROD	IS 318 Gr. LTB2 / IS 6912 Gr. FLB
8	HAND WHEEL	CAST IRON (IS 210 Gr.FG200) / M.S. SHEET (POWDER COATED)	----------
9	WASHER	CARBON STEEL	----------
10	SCREW	CARBON STEEL	IS 1367

Note : The above data is subject to change without notice due to our continuing product improvement program.