GUN METAL/BRONZE

IS778
CM/L-0485757

GATE VALVE

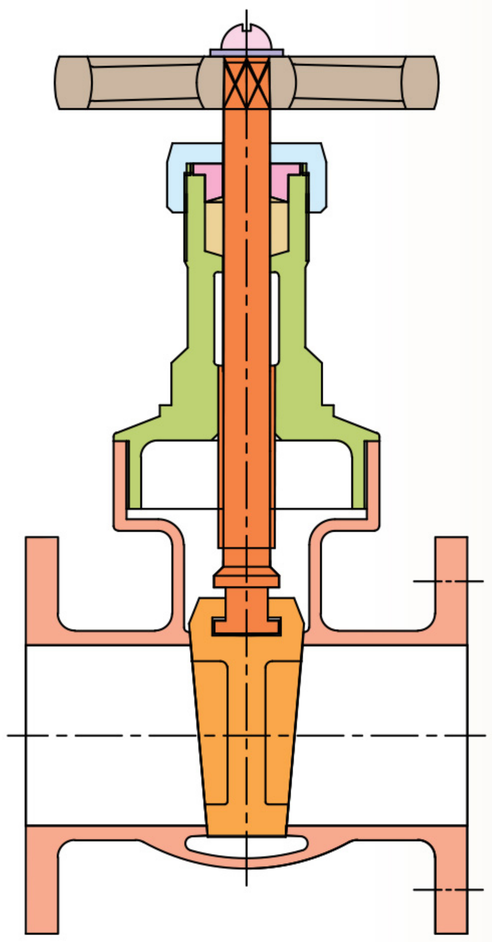

BODY	1
WEDGE	2
STEM	3
BONNET	4
PACKING	5
GLAND	6
GLAND NUT	7
HAND WHEEL	8
WASHER	9
SET SCREW	10

- **Item Code:** IS 005 & IS 011
- **Pressure Rating:** CL-1 & CL-2
- **Testing Standard:** IS 6157
- **Size Range:** 15mm to 100mm
- **Product Standard:** IS 778

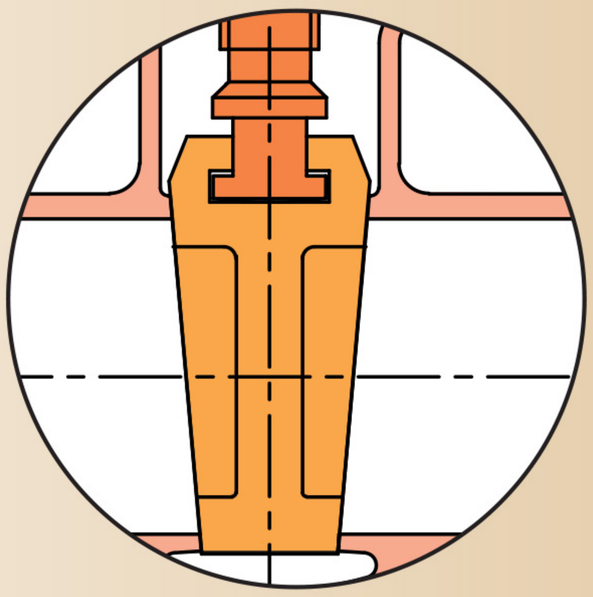

PRESSURE/TEMPERATURE DIAGRAM

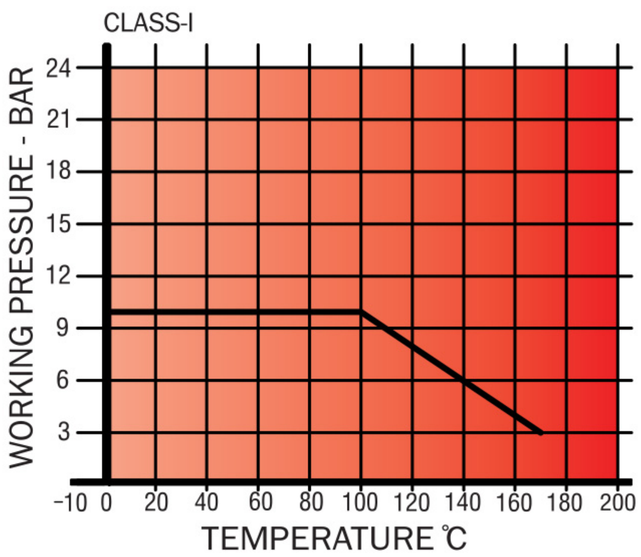

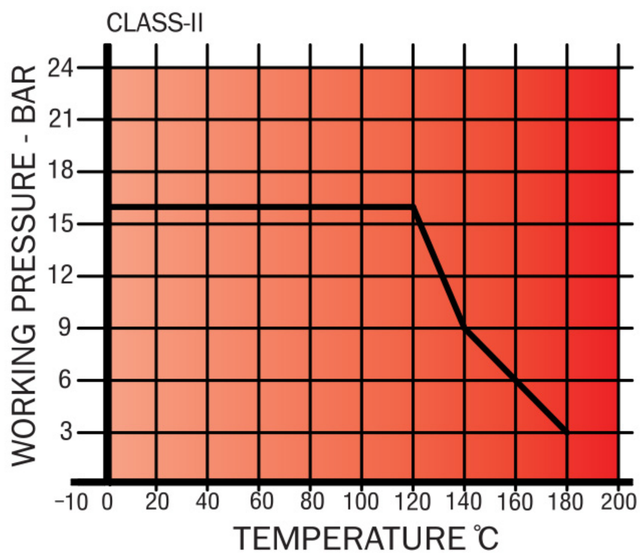

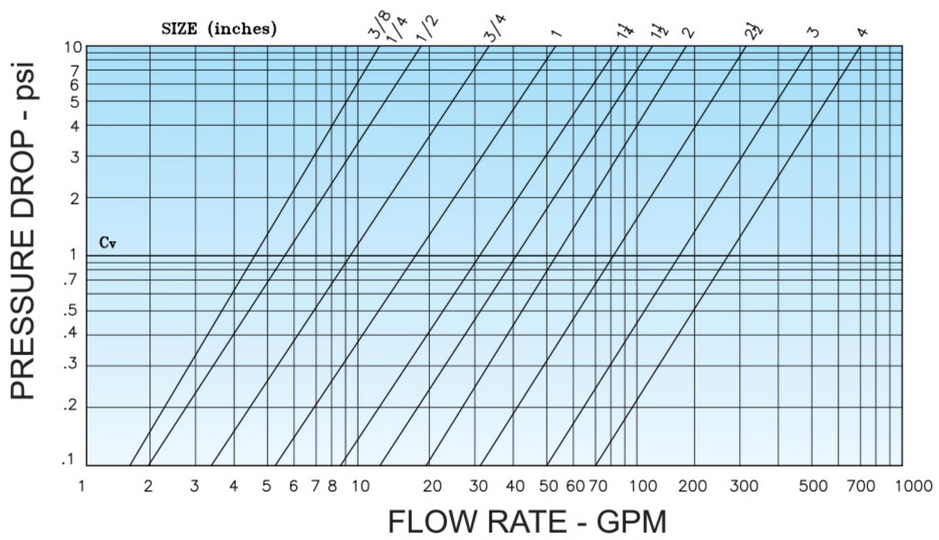

Note : The above data is subject to change without notice due to our continuing product improvement program.

PRINCIPAL FEATURES

- Design Std.: IS:778.
- Screwed in bonnet, inside screw rising stem, integral seat.
- Flanged ends as per IS 778.
- Heavy duty full bore.
- Extra strength of stem with high tensile brass.
- Provision for repacking under pressure in the installed condition.
- Sheet metal handwheel offers better strength & convenient operation.
- Easy visual control of open / closed position marked on the handwheel / name plate.
- Available with open-shut indicator & locking arrangement on request.

END CONNECTION

- Flanges as per IS:778 Class-I / Class-II,FF.

UTILISATION & SERVICE

- "LEADER" Gun Metal Gate valves are suitable for above-ground installations.
- Best suited for potable water, treated fresh water, neutral liquids & some gases.

WORKING PRESSURE

- Maximum Working Pressure: (Class-I) 10 Bar, (Class-II) 16 Bar.
- See Pressure / Temperature Diagram.

TEMPERATURE LIMITS

- Maximum working temperature: 45°C.
- See Pressure / Temperature Diagram.

PRESSURE RATING: CL-1 & CL-2

TEST PRESSURE (Hydrostatic)	
CLASS - 1	
BODY	SEAT
1.5 Mpa (217.5 psig)	1.0 Mpa (145 psig)

TEST PRESSURE (Hydrostatic)	
CLASS - 2	
BODY	SEAT
2.4 Mpa (348 psig)	1.6 Mpa (232 psig)

SUITABLE FOR

Water	Oil	Air	Gases
✓		✓	✓

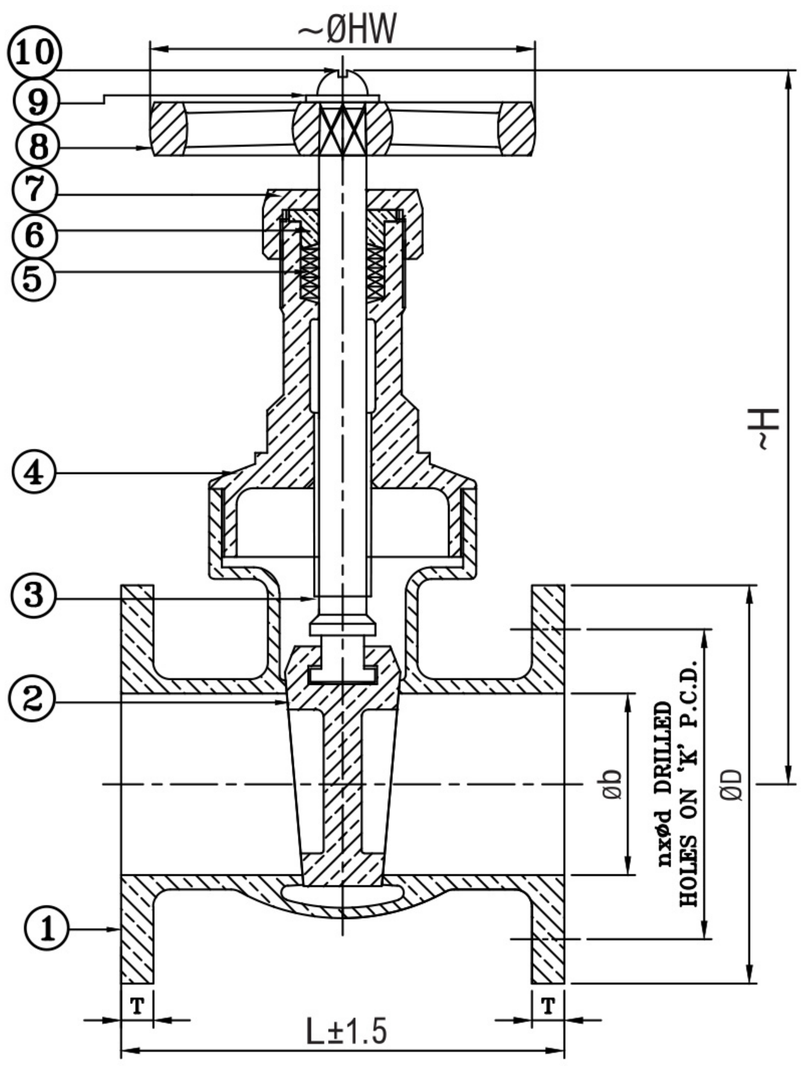

DIMENSION TABLE

SIZE (mm)	15	20	25	32	40	50	65	80	100
L	72	76	90	100	110	120	140	150	190
~H	110	130	150	170	200	230	285	330	432
~ØHW	60	60	70	90	92	103	130	150	165
Øb	15	20	25	32	40	50	65	80	100
ØD	95	105	115	140	150	165	185	200	220
T	6	6	8	8	9	11	13	13	16
K	65	75	85	100	110	125	145	160	180
n	4	4	4	4	4	4	4	8	8
Ød	14	14	14	18	18	18	18	18	18
Item Code (CL-1)	IS 005	IS 005	IS 005	IS 005	IS 005	IS 005	IS 005	IS 005	IS 005
Item Code (CL-2)	IS 011	IS 011	IS 011	IS 011	IS 011	IS 011	IS 011	IS 011	IS 011

MATERIAL SPECIFICATION

P.No.	NAME OF PART	MATERIAL	SPECIFICATION
1	BODY	LEADED TIN BRONZE	IS 318 Gr. LTB2
2	WEDGE	LEADED TIN BRONZE / FORGED BRASS	IS 318 Gr. LTB2 / IS 6912 Gr. FLB
3	STEM	HIGH TENSILE BRASS	IS 6912 Gr. FHTB1 / IS 6912 Gr. FLB
4	BONNET	LEADED TIN BRONZE / FORGED BRASS	IS 318 Gr. FHTB2 / IS 6912 Gr. FLB
5	PACKING	HEMP & JUTE	IS 5414
6	GLAND	LEADED TIN BRONZE / BRASS ROD	IS 318 Gr. LTB2 / IS 6912 Gr. FHTB1
7	GLAND NUT	LEADED TIN BRONZE / BRASS ROD	IS 318 Gr. LTB2 / IS 6912 Gr. FLB
8	HANDWHEEL	CAST IRON (IS 210 Gr. FG200) / M.S. SHEET (POWDER COATED)	
9	WASHER	CARBON STEEL	_____
10	SCREW	CARBON STEEL	IS 1367

Note : The above data is subject to change without notice due to our continuing product improvement program.