GUN METAL/BRONZE

GATE VALVE

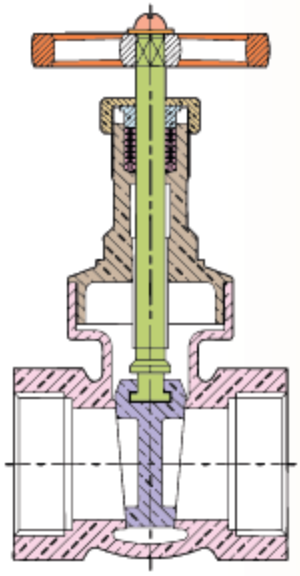

SCREW	1	
WASHER	2	
HAND WHEEL	3	
STEM	4	
GLAND NUT	5	
GLAND	6	
PACKING	7	
BONNET	8	
WEDGE	9	
BODY	10	

- **Item Code:** GM0189
- **Pressure Rating:** PN-20
- **Testing Standard:** BSEN 12266 PART-1
- **Size Range:** 15mm to 100mm
- **Product Standard:** BS 5154

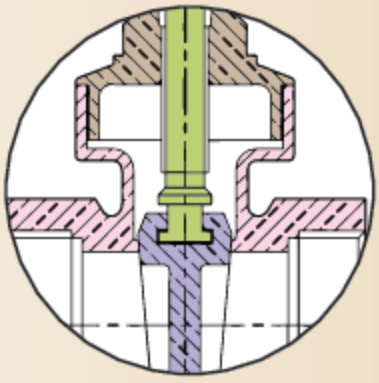

PRESSURE/TEMPERATURE DIAGRAM

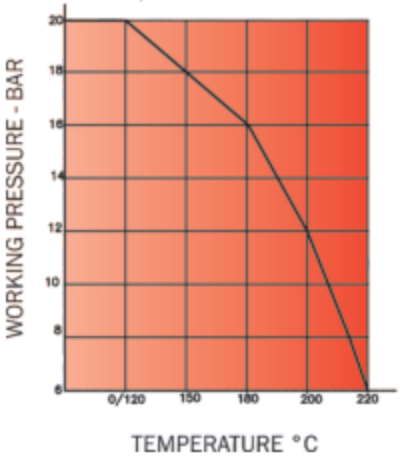

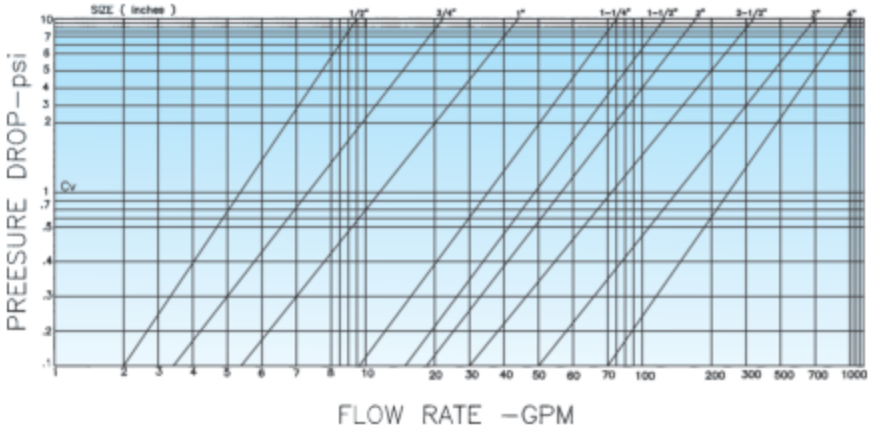

Note : The above data is subject to change without notice due to our continuing product improvement program.

PRINCIPAL FEATURES:

- Design Std.: BS 5154.
- Screwed in bonnet, inside screw non-rising stem.
- Heavy duty full bore long threads.
- Gun Metal / Brass Working Parts, integral seat.
- Screwed female NPT threads to ASME B1.20.1.
- Extra strength of stem with high tensile brass.
- Provision for re-packing under pressure in the installed condition.
- Wear resistant solid and long lasting materials.
- Sheet metal handwheel offers better strength & convenient operation.
- Easy visual control of open / closed position marked on the handwheel / name plate.
- Available with open-shut indicator & locking arrangement on request.

SUITABLE FOR

Water	Oil	Air	Gases
✓		✓	✓

END CONNECTION:

- Screwed female NPT threads to ASME B1.20.1.
- Parallel Female Threads to BS21 / IS:554 also available upon request with no price implication.

UTILISATION & SERVICE

- "LEADER" Gun Metal Gate valves are suitable for above-ground installations.
- Best suited for hot & cold water, air, neutral liquids & some gases.

WORKING PRESSURE

- Maximum Working Pressure: 20 Bar.
- See Pressure / Temperature Diagram.

TEMPERATURE LIMITS:

- Maximum working temperature: 225°C.
- See Pressure / Temperature Diagram.

PRESSURE RATING: PN-20

TEST PRESSURE (Hydrostatic)	
BODY	SEAT
30 BAR (g)	22 BAR (g)

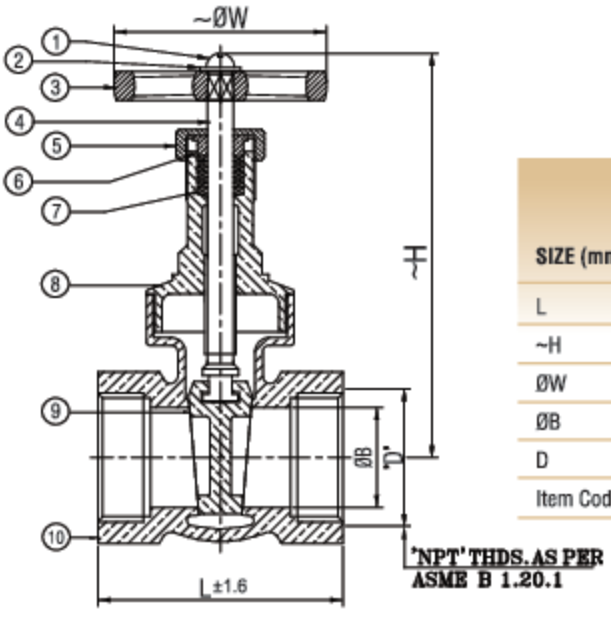

DIMENSIONAL DATA

SIZE (mm)	15	20	25	32	40	50	65	80	100
L	60	60	70	80	90	100	105	125	160
~H	110	130	150	170	200	230	285	330	405
ØW	60	60	70	90	92	130	130	150	165
ØB	15	20	25	32	40	65	65	80	100
D	1/2"	3/4"	1"	1-1/4"	1-1/2"	2"	2-1/2"	3"	4"
Item Code	GM 189	GM 189	GM 189	GM 189	GM 189	GM 189	GM 189	GM 189	GM 189

MATERIAL SPECIFICATION

P.No.	NAME OF PART	MATERIAL	SPECIFICATION
1	SCREW	MILD STEEL	-----
2	WASHER	MILD STEEL	-----
3	HAND WHEEL	CAST IRON / (M.S. SHEET)	BSEN 1561 ENGJL200
4	STEM	HIGH TENSILE BRASS	BSEN 12165 CW721R
5	GLAND NUT	BRASS / BRONZE	BSEN 12165 CW617N / ASTM B62 GR. C83600
6	GLAND	BRASS	BSEN 12165 CW617N
7	PACKING	GRAPHITE	-----
8	BONNET	BRONZE	ASTM B62 GR. C83600
9	WEDGE	BRONZE	ASTM B62 GR. C83600
10	BODY	BRONZE	ASTM B62 GR. C83600

Note : The above data is subject to change without notice due to our continuing product improvement program.