GUN METAL

GLOBE VALVE

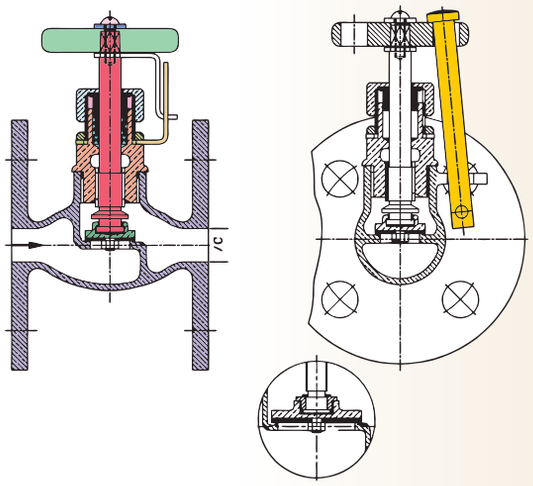

BODY	1
DISC	2
STEM	3
BONNET	4
GLAND PACKING	5
GLAND	6
GLAND NUT	7
HAND WHEEL	8
WASHER	9
SET SCREW	10
POSITION INDICATOR	11
CHECK NUT	12
LOCKING ROD	13

- **Item Code:** GM0178 / GM0193
- **Pressure Rating:** PN-10
- **Testing Standard:** BSEN 12266 PART-1
- **Size Range:** 15mm to 80mm
- **Product Standard:** IS 778

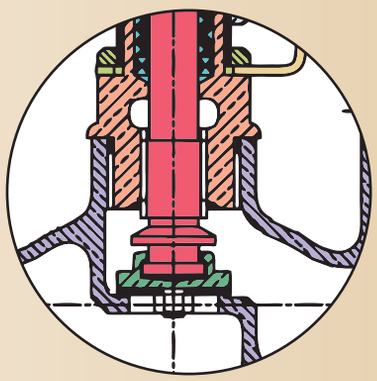

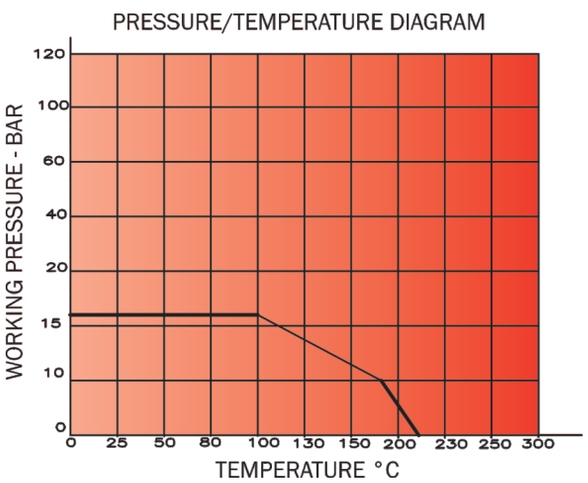

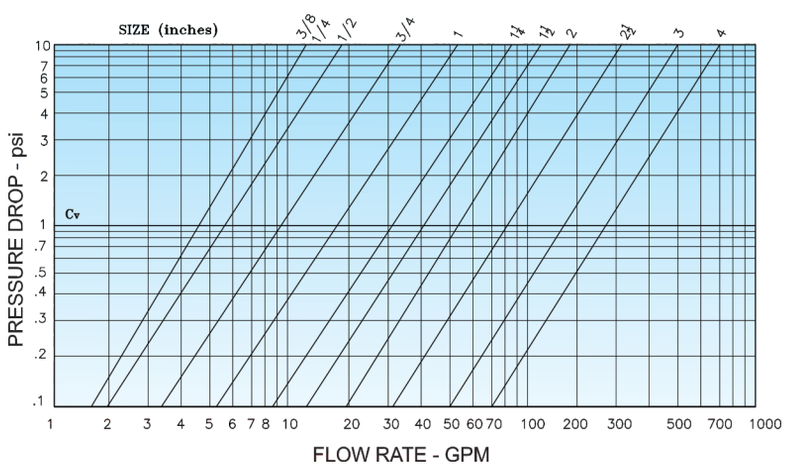

Note : The above data is subject to change without notice due to our continuing product improvement program.

PRINCIPAL FEATURES

- Design Std.: IS 778.
- Screwed in bonnet, inside screw rising stem.
- Gun Metal / Brass working parts, integral seat.
- Flanges as per IS 778 CL-1.
- Extra strength of stem with high tensile brass.
- Deep stuffing box with PTFE packing ensures zero leakage from the stuffing box.
- Provision for re-packing under pressure in the installed condition.
- Wear resistant solid and long lasting materials.
- Cast Iron Hand wheel with the provision of locking arrangement.
- Easy visual control of open / closed position marked on the handwheel / name plate.
- Available with open-shut indicator.
- All Valves are seepage tested with transformer oil at pressure 2 Kg / cm2 and temperature 100 to 110 Deg. Cent with no visible leakage / seepage through seat, body / bonnet joint and stuffing box.

END CONNECTION

- Flanges as per IS 778 CL-1 F.F.

UTILISATION & SERVICE

- "LEADER" Gun Metal Globe Valves are suitable for above-ground installations.
- Best suited for Transformer Oil.

TEMPERATURE LIMITS

- Maximum working temperature: 110°C.
- See Pressure / Temperature Diagram.

WORKING PRESSURE

- Maximum Inlet Pressure: 10 Bar.
- See Pressure / Temperature Diagram.

PRESSURE RATING: PN-10

TEST PRESSURE (Hydrostatic)	
BODY	SEAT
16 Bar	11 Bar

SUITABLE FOR

Transformer Oil	Air	Gases
✓		

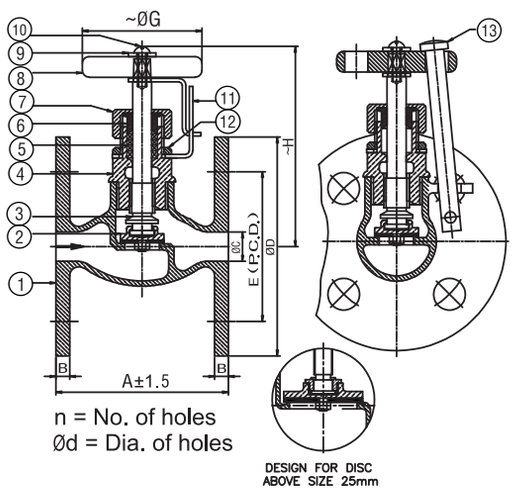

DIMENSIONAL DATA

SIZE (mm)	15	20	25	32	40	50	65	80	100
A	75	85	95	110	120	145	165	185	216
B	6	6	8	8	9	11	13	13	16
ØC	15	20	25	32	40	50	65	80	100
ØD	95	105	115	140	150	165	185	200	220
E	65	75	85	100	110	125	145	160	180
~H	83	94	101	109	122	128	156	174	206
ØG	60	60	70	90	92	103	130	150	165
n	4	4	4	4	4	4	4	8	8
d	14	14	14	18	18	18	18	18	18
Item Code	GM0178/ GM0193	GM0178/ GM0193	GM0178/ GM0193	GM0178/ GM0193	GM0178/ GM0193	GM0178/ GM0193	GM0178/ GM0193	GM0178/ GM0193	GM0178/ GM0193

MATERIAL SPECIFICATION

P.No.	NAME OF PART	MATERIAL	SPECIFICATION
1	BODY	LEADED TIN BRONZE	IS 318 Gr. LTB2
2	DISC	LEADED TIN BRONZE + PTFE	IS 318 Gr. LTB2 + PTFE SEALED
3	STEM	FORGED BRASS	IS 6912 FHTB1
4	BONNET	LEADED TIN BRONZE / FORGED BRASS	IS 318 Gr. LTB2 / IS 6912 FLB
5	GLAND PACKING	PTFE	
6	GLAND	LEADED TIN BRONZE / FORGED BRASS	IS 318 Gr. LTB2 / IS 6912 FLB
7	GLAND NUT	LEADED TIN BRONZE / FORGED BRASS	IS 318 Gr. LTB2 / IS 6912 FLB
8	HAND WHEEL	CAST IRON / MILD STEEL SHEET	IS 210 Gr. FG 200 / ANY GRADE
9	WASHER	CARBON STEEL	-----
10	SET SCREW	CARBON STEEL	-----
11	POSITION INDICATOR	BRASS SHEET	-----
12	CHECK NUT	BRASS ROD / LEADED TIN BRONZE	IS 6912 FLB / IS 318 Gr. LTB2
13	LOCKING ROD	MILD STEEL	GALVANISED

Note : The above data is subject to change without notice due to our continuing product improvement program.