# GUN METAL/BRONZE

IS778
CM/L-0485757

# GLOBE VALVE

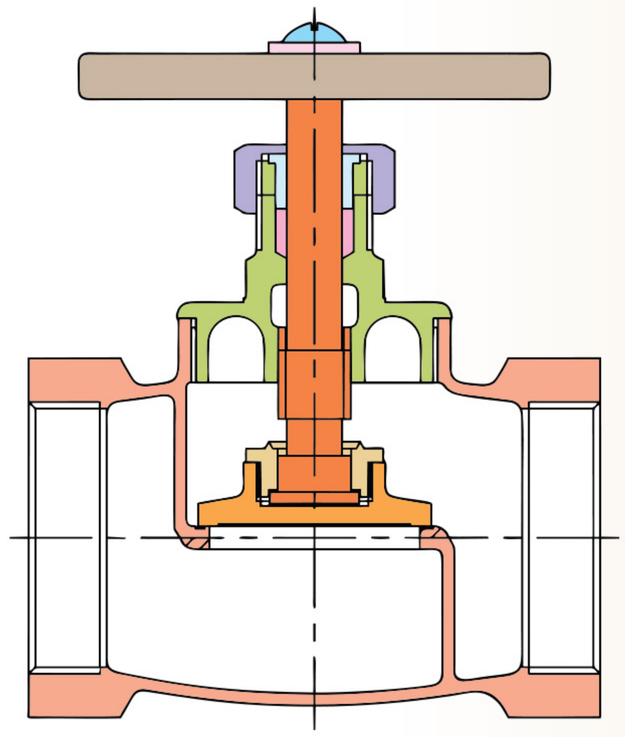

| | |
|---|---|
| BODY | 1 |
| DISC | 2 |
| STEM NUT | 3 |
| STEM | 4 |
| BONNET | 5 |
| GLAND PACKING | 6 |
| GLAND | 7 |
| GLAND NUT | 8 |
| HAND WHEEL | 9 |
| WASHER | 10 |
| SET SCREW | 11 |

- **Item Code:** IS 013 & IS 017
- **Pressure Rating:** CL-1 & CL-2
- **Testing Standard:** IS 6157
- **Size Range:** 8mm to 100mm
- **Product Standard:** IS 778

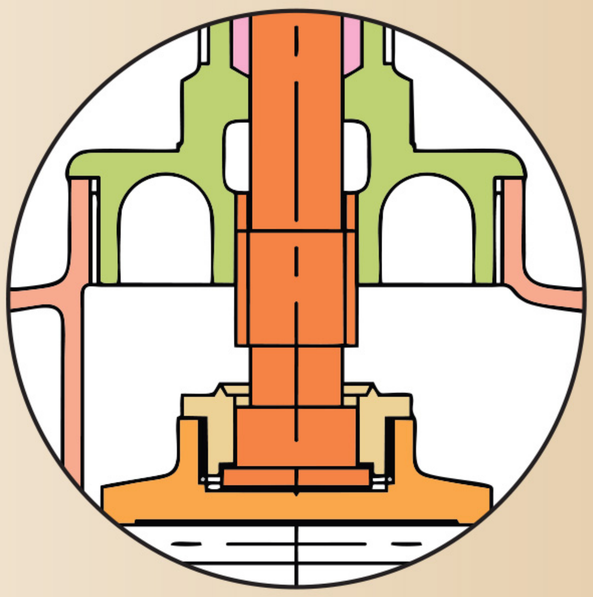

PRESSURE/TEMPERATURE DIAGRAM

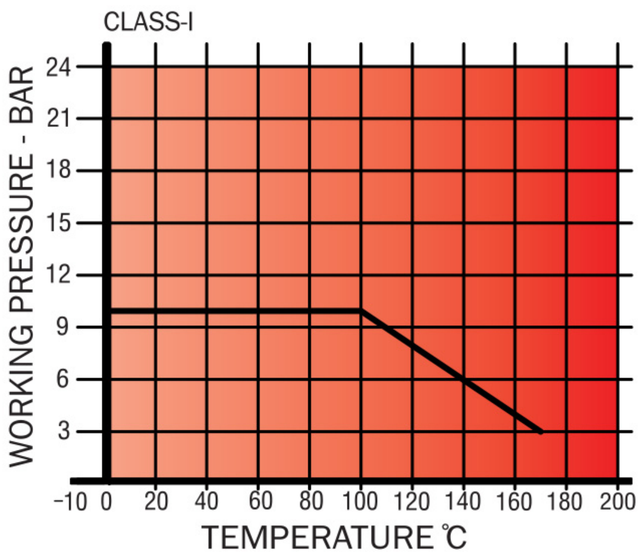


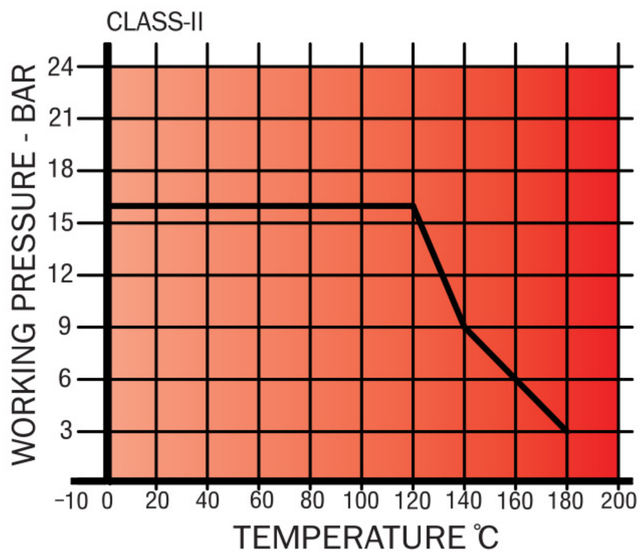


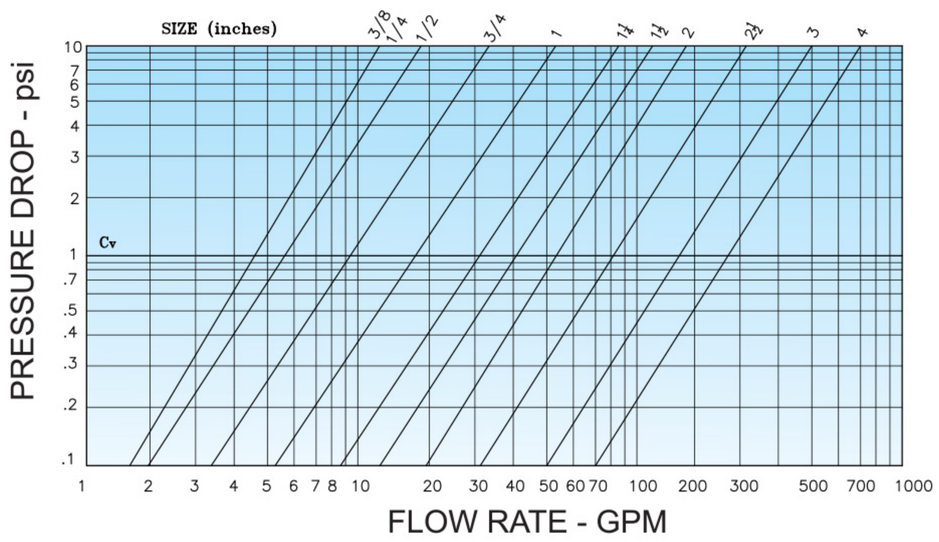


Note : The above data is subject to change without notice due to our continuing product improvement program.

## PRINCIPAL FEATURES

- Design Std.: IS:778.
- Screwed in bonnet, inside screw rising stem, integral seat.
- Screwed female parallel threads to IS:554.
- Profiled contoured shape body for minimum pressure head loss.
- Extra strength of stem with high tensile brass.
- Provision for re-packing under pressure in the installed condition.
- Sheet metal handwheel offers better strength & convenient operation.
- Easy visual control of open / closed position marked on the handwheel / name plate.
- Available with open-shut indicator & locking arrangement on request.

## END CONNECTION

- Screwed Female threads IS:554 (Parallel).

## UTILISATION & SERVICE

- "LEADER" Gun Metal Globe valves are suitable for above-ground installations.
- Best suited for potable water, treated fresh water, neutral liquids & some gases.

## WORKING PRESSURE

- Maximum Working Pressure: (Class-I ) 10 Bar, (Class-II) 16 Bar.
- See Pressure / Temperature Diagram.

## TEMPERATURE LIMITS

- Maximum working temperature: 45°C.
- See Pressure / Temperature Diagram.

## PRESSURE RATING: CL-1 & CL-2

| TEST PRESSURE (Hydrostatic) | |
|---|---|
| CLASS - 1 | |
| BODY | SEAT |
| 1.5 Mpa (217.5 psig) | 1.0 Mpa (145 psig) |

| TEST PRESSURE (Hydrostatic) | |
|---|---|
| CLASS - 2 | |
| BODY | SEAT |
| 2.4 Mpa (348 psig) | 1.6 Mpa (232 psig) |

## SUITABLE FOR

| Water | Oil | Air | Gases |
|---|---|---|---|
| ✓ | | ✓ | ✓ |

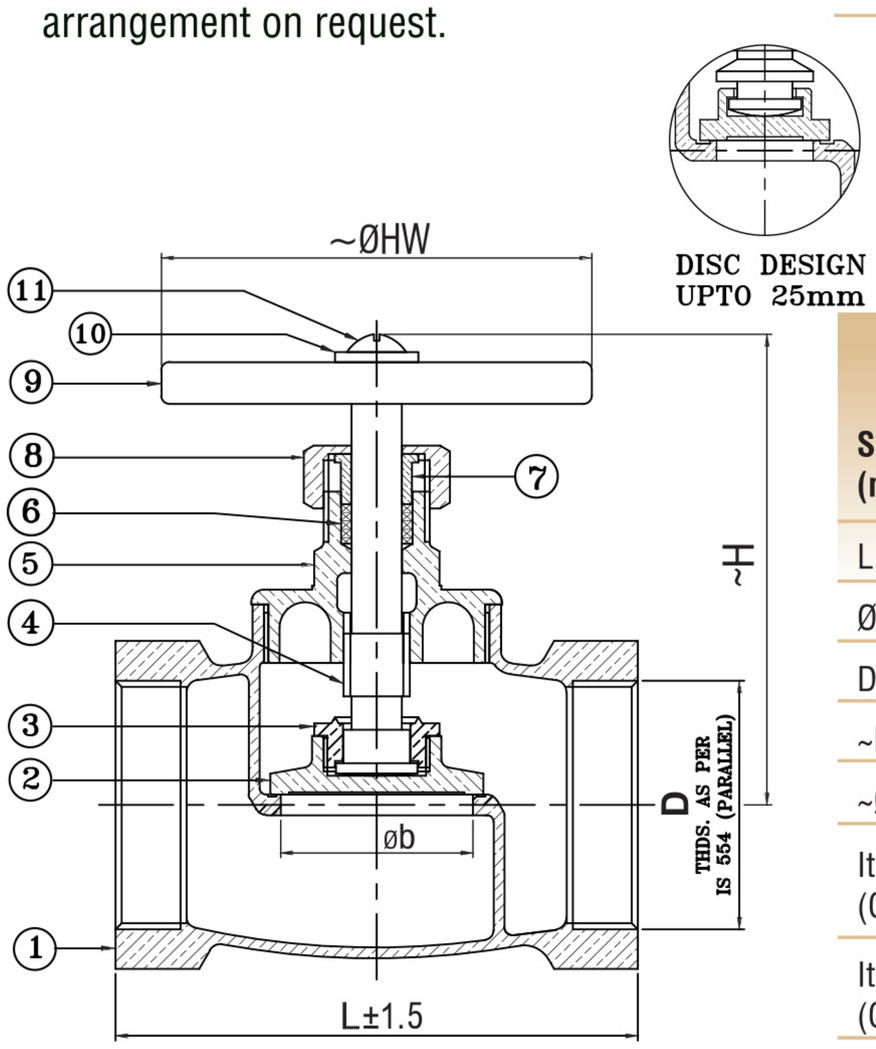


## DIMENSION TABLE

| SIZE (mm) | 8 | 10 | 15 | 20 | 25 | 32 | 40 | 50 | 65 | 80 | 100 |
|---|---|---|---|---|---|---|---|---|---|---|---|
| L | 47 | 50 | 60 | 70 | 80 | 95 | 110 | 125 | 160 | 180 | 216 |
| Øb | 8 | 10 | 14 | 18.5 | 23 | 30 | 37 | 46 | 65 | 80 | 100 |
| D | 1/4" | 3/8" | ½" | 3/4" | 1" | 1-1/4" | 1-1/2" | 2" | 2-1/2" | 3" | 4" |
| ~H | 70 | 70 | 74 | 82.3 | 90 | 96 | 102 | 114 | 156 | 174 | 206 |
| ~ØHW | 48 | 48 | 60 | 60 | 70 | 90 | 92 | 103 | 130 | 150 | 165 |
| Item Code (CL-1) | IS013 | IS013 | IS013 | IS013 | IS013 | IS013 | IS013 | IS013 | IS013 | IS013 | IS013 |
| Item Code (CL-2) | IS017 | IS017 | IS017 | IS017 | IS017 | IS017 | IS017 | IS017 | IS017 | IS017 | IS017 |

## MATERIAL SPECIFICATION

| P.No. | NAME OF PART | MATERIAL | SPECIFICATION |
|---|---|---|---|
| 1 | BODY | LEADED TIN BRONZE | IS 318 Gr. LTB2 |
| 2 | DISC | LEADED TIN BRONZE / HIGH TENSILE BRASS | IS 318 Gr. LTB2 / IS 6912 Gr. FHTB1 |
| 3 | STEM NUT | CARBON STEEL | IS 2062 |
| 4 | STEM | HIGH TENSILE BRASS | IS 6912 Gr. FHTB1 |
| 5 | BONNET | LEADED TIN BRONZE / HIGH TENSILE BRASS | IS 318 Gr. LTB2 / IS 6912 Gr. FLB |
| 6 | GLAND PACKING | HEMP & JUTE | IS 5414 |
| 7 | GLAND | LEADED TIN BRONZE / FORGED BRASS | IS 318 Gr. LTB2 / IS 6912 Gr. FHTB1 |
| 8 | GLAND NUT | LEADED TIN BRONZE / FORGED BRASS | IS 318 Gr. LTB2 / IS 6912 Gr. FHTB1 |
| 9 | HAND WHEEL | CAST IRON (IS 210 Gr. FG200) / M.S. SHEET (POWDER COATED) | |
| 10 | WASHER | CARBON STEEL | IS 2062 |
| 11 | SET SCREW | CARBON STEEL | --------- |

Note : The above data is subject to change without notice due to our continuing product improvement program.